DIGITAL READINESS STRATEGY FOR THE PHILIPPINES

Disaster Risk Reduction and Management - Climate Change Adaptation (DRRM-CCA)

A Supplementary Document to the National Disaster Risk Reduction and Management Plan 2020-2030

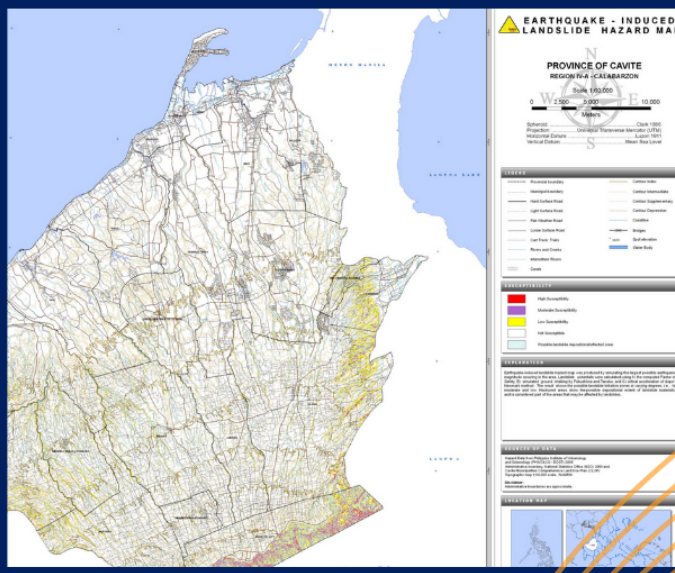

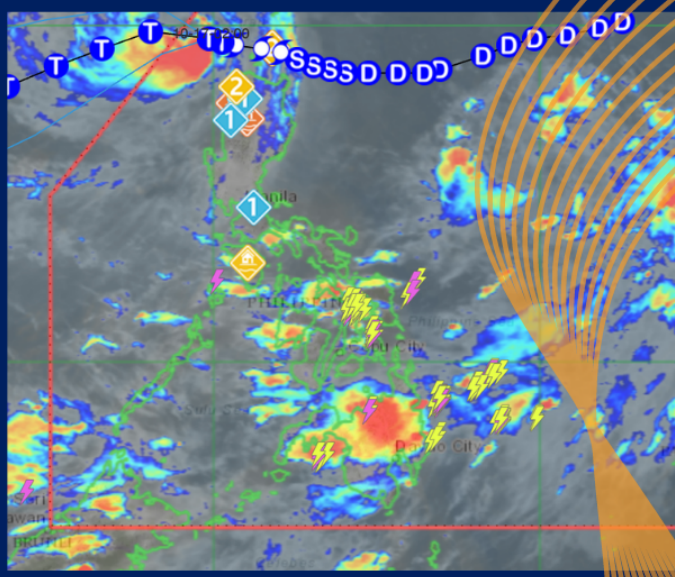

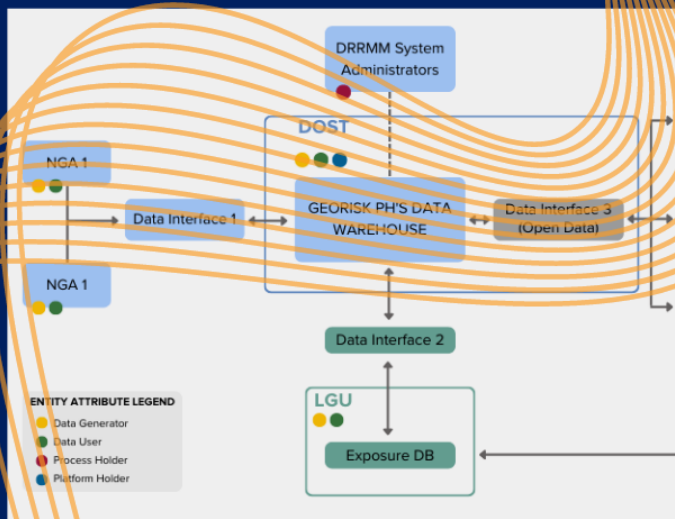

NDRRMC Proactive

From the People of Japan

UNDP

DX4Resilience
CONNECT INNOVATE ACCELERATE

DIGITAL READINESS STRATEGY FOR THE PHILIPPINES

A Supplementary Document to the National Disaster Risk Reduction and Management Plan 2020-2030

Prepared by Thinking Machines Data Science (TMDS) for the National Disaster Risk Reduction and Management Council (NDRRMC) and the United Nations Development Programme (UNDP) through the DX4Resilience project funded by the People of Japan.

DELFIN N. LORENZANA

CHAIRPERSON, NATIONAL DISASTER RISK REDUCTION AND MANAGEMENT COUNCIL

The National Disaster Risk Reduction and Management Plan (NDRRMP) serves as the country's blueprint for implementing a proactive disaster risk reduction and management preparedness system.

With the recent update and release of the NDRRM Plan 2020-2030, we have underscored the centrality of risk, and concentrating on an all-hazards approach to address the four priorities for action of the Sendai Framework for Disaster Risk Reduction. The plan integrated guiding principles, targets, and indicators with other global frameworks on disaster risk reduction, climate change adaptation, and sustainable development. It reinforces strategic directions toward risk-informed investments and gender responsiveness. Further, it promotes locally-led and ecosystem-based disaster risk reduction and climate change adaptation, assuring public-private partnerships, and inviting health investments.

With the country's reinvigorated drive for digital transformation, we have pursued a data governance study of the Philippine Disaster Risk Reduction - Climate Change Adaptation (DRR-CCA) data ecosystem which helped us institutionalize the most appropriate interagency governance framework. It's results enabled us to design a high-level roadmap for an efficient, robust, and operational DRR-CCA ecosystem to catalyze data-driven decision-making. We have made this data available to the public and to our communities through web and mobile platforms containing reliable and timely information. In disaster risk reduction, we believe that innovation and science and technology are the way forward.

Moving ahead, the Philippines will continue pursuing digital maturity for DRR-CCA through this Digital Readiness Strategy, supplemental to the updated NDRRM Plan. I proudly congratulate all NDRRMC member agencies for successfully supporting and participating in this endeavor, including our partners: The United Nations Development Programme (UNDP) and the People of Japan. We commit to continue to expand on these gains for our peole across these islands.

Sama-sama nating panatilihing ligtas at panatag ang Pilipinas!

RICARDO B. JALAD

CIVIL DEFENSE ADMINISTRATOR AND EXECUTIVE DIRECTOR,
NATIONAL DISASTER RISK REDUCTION AND MANAGEMENT COUNCIL

The Philippines remains amongst the world's most vulnerable countries to natural hazards due to the regular occurrences of typhoons, floods, drought, earthquakes, and volcanic eruptions–all exacerbated by climate change. Battered by an average of 21 tropical cyclones annually, the consequences have been devastating. Thousands of lives were lost over previous decades, and economic losses amount to hundreds of billions. But each disaster has also brought with it lessons on how to better prepare, avoid the loss of life, and reduce economic devastation and damage to infrastructure.

The Updated National Disaster Risk Reduction and Management Plan (NDRRMP) 2020-2030 highlights the revised outcomes, key activities, and agencies' responsibilities across all the thematic areas of Disaster Prevention and Mitigation, Disaster Preparedness, Disaster Response and Early Recovery, and Disaster Rehabilitation and Recovery. Cutting across, and critical to success of all these outcomes, is the need to harness and maximize the opportunities accorded by the digital revolution, especially given that speed and coverage are two crucial elements to save lives. In the occurrence of disasters, every second lost increases the risk of lives lost.

I congratulate the members of the National Council for their support and active participation in the conduct of the Data Governance Study and corresponding Digital Readiness Strategy, supplemental to our Updated NDRRM Plan. With the support of our partners: the United Nations Development Programme (UNDP) and the People of Japan, we have begun to paint a collective picture of an extremely complex digital landscape in disaster risk reduction that we can effectively act upon and improve together.

Together with all the member-agencies of the NDRRMC, and guided by our collective desire to build safer, adaptive and disaster resilient Filipino communities towards sustainable development, we will continue to support the country's digital transformation and pursue digital maturity through this Digital Readiness Strategy.

DR. RENATO U. SOLIDUM, JR.

SECRETARY, DEPARTMENT OF SCIENCE AND TECHNOLOGY
VICE-CHAIRPERSON, DISASTER PREVENTION AND MITIGATION

Achieving resilience requires the consideration of the complex and continually changing global risk landscape, and taking transformative actions to reduce the impacts of disasters and emergencies on lives, livelihoods, and resources, among others. Especially for the Philippines, battered frequently by natural hazards, institutionalizing disaster and climate risk assessment as bases of local plans, and strategies and measures for reducing risks and vulnerabilities is even more imperative.

Therefore, it is a national aspiration that a means and mechanism that enables expansive collaboration be developed to tackle hared climate and disaster risks - those that cannot otherwise be addressed successfully by individuals and organizations acting independently. It is a national aspiration that experts from all levels of government and all sectors of society have a space to contribute and collaborate in matters that affect us all. It is a national aspiration that citizens have the information they need to build their household resilience.

As Vice Chairperson for the Disaster Prevention and Mitigation pillar of the NDRRMC, I proudly acknowledge the collective feat of NDRRMC member-agencies, and partners such as academe, business, and CSOs, and other sectors, who came together in what I believe to be one of the largest steps we have taken towards digital maturity; that is - to understand the lay of the land of the DRRM data ecosystem. With this, we can march ahead in addressing exigent ecosystem needs.

There is much work ahead, as we are just beginning this journey towards digital harmonization and optimization in pursuit of disaster resilience. With the continued support of everyone, including that of the United Nations Development Programme, I am confident we can achieve much in that regard.

Mabuhay!

NDRRMC RESOLUTION NO. 05, s. 2022

RESOLUTION ADOPTING THE DATA GOVERNANCE STUDY FINAL REPORT AND DIGITAL READINESS STRATEGY IN SUPPORT OF THE OPERATIONALIZATION OF THE UPDATED NDRRMP 2020-2030

WHEREAS, Section 2(e) of Republic Act (RA) No. 10121, otherwise known as the "Philippine Disaster Risk Reduction and Management Act of 2010," provides that it shall be the policy of the State to "develop, promote, and implement a comprehensive National Disaster Risk Reduction and Management Plan (NDRRMP) that aims to strengthen the capacity of the national government and the local government units (LGUs), together with partner stakeholders, to build the disaster resilience of communities, and to institutionalize arrangements and measures for reducing disaster risks, including projected climate risks, and enhancing disaster preparedness and response capabilities at all levels";

WHEREAS, National Disaster Risk Reduction and Management Council (NDRRMC) Resolution No. 08, s. 2020 provides for the approval of the National Disaster Risk Reduction Management Framework and Plan 2020-2030 and its dissemination to the members of the NDRRMC, Regional and Local DRRMCs, and heads of national agencies;

WHEREAS, NDRRMC Disaster Prevention and Mitigation Cluster Resolution No. 01, s. 2021, otherwise known as a "Resolution Establishing Cooperation with UNDP on Data Governance for Resilience," provides for the partnership with the United Nations Development Programme (UNDP) in strengthening the country's data governance towards resilience, including the conduct of a Data Governance Study and development of a corresponding Digital Readiness Strategy, supplemental to the NDRRMP 2020-2030;

WHEREAS, NDRRMC Disaster Prevention and Mitigation Cluster Resolution No. 01, s. 2021 acknowledges that given the abundance of climate and disaster risk assessment requisite datasets housed in different government agencies, in varying typologies and formats, even with similar typologies and class definitions, and produced by different programs, projects, and activities with different purposes, that there is a need for a clear, harmonized data sharing and standardization protocol that will provide a process, and its corresponding parameters, for relevant government agencies, that will help resolve issues hindering consolidation and processing of data;

WHEREAS, NDRRMC Disaster Prevention and Mitigation Cluster Resolution No. 01, s. 2021 acknowledges that one of the directives during the thirty-ninth (39th) Cabinet Meeting, held on 01 July 2019, is for all government departments and agencies to use GeoRiskPH as an integrated system and platform for hazards assessment, among others, which can be used by decision makers in physical planning and

evidence-based policy making, for the conduct of hazards and risk assessments, and to share with the Department of Science and Technology - Philippine Institute of Volcanology and Seismology (DOST-PHIVOLCS) the most recent data necessary for hazards and risk assessments, (e.g., hazards, exposure, vulnerability, coping capacity, and etc.) following the standard codes prescribed by the GeoRiskPH Integrated System, ensuring the accuracy of data and sustainability efforts;

WHEREAS, the Office of Civil Defense (OCD) and the UNDP presented the results of the Data Governance Study, including the corresponding recommendations in its Digital Readiness Strategy during the 1st Quarter CY 2022 NDRRMC Full Council Meeting (FCM), held last 25 March 2022, wherein the Council approved the study, including its strategic recommendations;

NOW, THEREFORE, the Council **RESOLVES**, as it hereby **RESOLVED** to:

1. Adopt the Data Governance Study final report, including the strategic recommendations detailed in its Digital Readiness Strategy, as enclosed in this resolution;

2. Provide its full cooperation in the execution of the Data Governance Study's recommendations, including the development of a harmonized data sharing and standardization protocol; and

3. Establish the GeoRiskPH data warehouse, to be led by the NDRRMC Disaster Prevention and Mitigation Cluster.

Done this 25th day of March 2022 at the Department of National Defense, Camp Aguinaldo, Quezon City.

DEPARTMENT OF NATIONAL DEFENSE
DNL-223704

DELFIN N LORENZANA
Chairperson, National Disaster Risk Reduction and Management Council
Secretary, Department of National Defense

Table of Contents

Table of Contents

List of Figures

List of Tables

Abbreviations

API	Application Programming Interface
CCA	Climate Change Adaptation
CDRA	Climate and Disaster Risk Assessment
CSO	Civil Society Organization
DDRRMM	Digital Disaster Risk Reduction Maturity Model
DENR-MGB	Department of Environment and Natural Resources - Mines and Geosciences Bureau
DENR-NAMRIA	Department of Environment and Natural Resources - National Mapping and Resource Information Authority
DGS	Data Governance Study
DFD	Data Flow Diagram
DILG	Department of the Interior and Local Government
DOST	Department of Science and Technology
DOST-PAGASA	Department of Science and Technology - Philippine Atmospheric, Geophysical and Astronomical Services Administration
DOST-PHIVOLCS	Department of Science and Technology - Philippine Institute of Volcanology and Seismology
DPA	Data Privacy Act
DPO	Data Privacy Officer
DRS	Digital Readiness Strategy
DRR	Disaster Risk Reduction
DSA	Data-Sharing Agreement
DRRM	Disaster Risk Reduction and Management
ICT	Information and Communications Technology
IRR	Implementing Rules and Regulations
LCCAP	Local Climate Change Action Plan

Abbreviations

LGU	Local Government Unit
MAVG	Mapping and Analysis of Vulnerable Groups
NDRRMC	National Disaster Risk Reduction and Management Council
NDRRMP	National Disaster Risk Reduction and Management Plan
NGA	National Government Agency
NPC	National Privacy Commission
PDNA	Post-Disaster and Needs Assessment
PIA	Privacy Impact Assessment
PIC	Personal Information Controller
PIP	Personal Information Processor
PMP	Privacy Management Program
PSA	Philippine Statistics Authority
RDANA	Rapid Damage and Needs Assessment
SSOT	Single Source of Truth

EXECUTIVE SUMMARY

This document is the Digital Readiness Strategy (DRS) to advance the use of digital resources and technologies for disaster risk reduction and management (DRRM) and climate change adaptation (CCA) in the Philippines. The DRS draws from the findings of the Data Governance Study (DGS) organized into two components: First, to measure the institutional capacity of the Prevention and Mitigation (P&M) member agencies using the Digital Disaster Risk Reduction Maturity Model (DDRRMM). The DDRRMM is an assessment tool that provides a vision of the mature or optimal level that Disaster Risk Reduction and Management (DRRM) stakeholders can achieve using digital resources and technologies (DR&T). The second component aimed to understand or "paint the picture" of the current digital DRRM-CCA landscape in the Philippines by characterizing the flow of data and identifying potential gaps and needs towards implementing data-driven decision-making. The significant gaps and issues confronting the Philippines' DRRM and CCA based on the findings of both components are: the presence of overlapping functions across numerous digital platforms, data access, and sharing are not seamless, limited human and financial resources capacities, and formulating DRRM-CCA plans and conducting assessments are challenging for LGUs.

The DRS and its corresponding actions are intended to contribute to achieving the national DRRM vision - **safer, adaptive, disaster-resilient Filipino communities toward sustainable development**, outlined in the NDRRMP 2020-2030. The DRS supports Outcome 1 of the plan on Improved access, understanding, and use of updated risk information, DRRM-related statistics, and research. The DRS is consistent with Prevention and Mitigation Pillar Memo Resolution No. 1 signed in 2021. These outcomes are: (1) strengthened mechanisms, policies, and institutional arrangements for promoting interoperability of DRRM-CCA platforms, centered on the National Disaster Risk Reduction and Management Council (NDRRMC) through streamlined processes and informed recommendations for data code standardization; (2) enhanced evidence-based decision-making support to NDRRMC, particularly for data management and data flow-related matters, through a data roster and data flow diagram, among other products and tools; (3) broadened stakeholder engagement and set up for future collaboration on digitalization of DRRM-CCA; (4) advanced digital transformation through the accelerated use of technologies and media in DRRM-CCA; and, (5) institutionalized national data infrastructure.

The DRS is composed of a three-pronged strategy for digital readiness. This three-pronged strategy adopts the technology aspect of the DDRRMM, groups the business processes and enabling environment of the DDRMM under governance, and includes a component highlighting people in the system. The latter comes from the findings that there is a significant opportunity to build and strengthen the competencies, capacities, and resources for agency staff and users within the DRRM-CCA ecosystem. Specifically, the DRS highlights the following strategy: **Technology** refers to the technical infrastructure and data; **people** refer to human capital, and **governance** refers to how the two other elements are managed or maintained. All components work together to ensure that the proposed DRS can be sustained indefinitely despite being dynamic with multiple stakeholders with different mandates or objectives. Under each strategy, the DRS has specific workstreams. The key differentiator of the DRS is its holistic approach to addressing problems. Unlike previous projects, which leaned into only one of the three prongs (i.e., Technology, People, and Governance), the workstreams recognize that all three interact and affect one another. The impact of solving the issues under one prong has historically been lackluster. Combining the outputs of past initiatives, the DRS' holistic approach, and the support of all stakeholders, the vision of safer, adaptive, disaster-resilient Filipino communities toward sustainable development is achievable.

CHAPTER 1: Introduction

1.1 Background of the DRS

In 2021, the Prevention and Mitigation (P&M) Pillar of the National Disaster Risk Reduction and Management Council (NDRRMC) in partnership with the Office of Civil Defense (OCD) and the United Nations Development Programme (UNDP) initiated a data governance study (DGS) to answer two essential questions: **How are we doing in the digitalization of DRRM-CCA in the Philippines? How and where should digital transformation intervene to improve the country's digital ecosystem?**

To answer the questions, the study was organized into two components: First, to measure the institutional capacity of the Prevention and Mitigation (P&M) member agencies using the Digital Disaster Risk Reduction Maturity Model (DDRRMM). The DDRRMM is an assessment tool that provides a vision of the mature or optimal level that Disaster Risk Reduction and Management (DRRM) stakeholders in the country can achieve using digital resources and technologies (DR&T). It enables DRRM managers, decision-makers, and other stakeholders to be aware of where their institutions stand from the optimal utilization of DR&T, help them identify the gaps, and enhance their understanding of the strengths, weaknesses, opportunities, and threats (SWOTs) they face in harnessing the full potential of advanced DR&T for DRRM. It also propels them to improve performance in the use of DR&T for DRRM by specifying the features and functions they are currently lacking, identify best practices they want to adopt, and chart roadmaps to achieve the next level of maturity. Lastly, the tool provides the first step for DRRM institutions to assess where they stand from realizing the full potential of DR&T identify a path for improvement, transition to the following steps, and measure their progress.

The second component of the DGS aimed to understand or "paint the picture" of the current digital DRRM-CCA landscape in the Philippines by characterizing the flow of data and identifying potential gaps and needs towards implementing data-driven decision-making in the country.

For the DDRRMM Assessment component of the DGS, a total of 15 P&M pillar member agencies[1] and two government partners[2] in disaster risk reduction and management (DRRM) and climate change adaptation (CCA) provided their institutional assessment. To complement the survey, interviews were conducted with selected P&M member agencies[3] to understand their respective digital platforms further. During the interviews, the study team used the same assessment tool to generate further information and validate their initial assessments. The agencies were selected based on the following criteria: DRRM and CCA mandate; the business process for DRRM and CCA functions; enabling environment practiced by the institution (e.g., data governance, institutional set-up, policy, data sharing arrangements); and, technological applications (e.g. utilization of digital data & ICT systems for DRRM and CCA).

A data mapping was carried out to understand and "paint the picture" of the current digital DRRM and CCA landscape in the country. The mapping covered the pre-disaster, disaster, and post-disaster phases, including the CDRA process, real-time hydro-meteorological and geological hazards, the NLDR, and the Rapid Disaster Assessment and Needs Analysis (RDANA)/Post Disaster Needs Assessment (PDNA). The DGS consolidated the high level DRRM-CCA data requirements for the abovementioned elements. Part of this component is conducting a non exhaustive DRRM and CCA Inventory to account for datasets being collected, managed, or maintained by different stakeholders to have a baseline of existing data assets. After the mapping and inventory, a Data Flow Diagram (DFD) was developed to document and trace the flow of DRRM and CCA.

In this component four types of stakeholders were engaged: the **platform holders** or stakeholders that own specialized platforms/digital solutions that use datasets to generate value for stakeholders; **data users** or stakeholders who receive or use raw/processed/analyzed data to generate value for themselves or others without necessarily owning specialized/digital solutions; **data generators** or stakeholders that capture and generate data/information that platforms or other stakeholders can use; and, **process**

1 BFP, DENR-NAMRIA, DHSUD, DILG - CODIX, DOST-PHIVOLCS, DPWH, DTI, DBM, DOE, GSIS, LCP, NEDA, NPC, DND-OCD, and DOST-PAGASA

2 PDC and UPRI

3 DOST-PHIVOLCS as the holder of GeoRiskPH, REDAS, and READY Project; DOST-PAGASA as the holder of the Philippines' climate information; OCDas the holder of the National Loss and Damage Registry (NLDR), PhilAware, and 24/7 Operation Center as well as the NDRRMC Secretariat; DENR-NAMRIA which serves as the primary mapping agency of the Philippines that produces topographic and base maps; and, UPRI as the holder of the National Operational Assessment of Hazards (NOAH) and representing the academy. DHSUD was also interviewed to get their perspectives about the CDRA process and development challenges.

holders or mandated agencies that influence data flow by control mechanisms such as needed datasets to deliver a service, restricting data usage, or necessitating safeguards.

A total of 10 organizations[4,2] participated in the data inventory process. To enrich the information collected from the DRRM and CCA data mapping process, the LGUs were engaged in a survey to get a picture of their existing climate and disaster data to support their pre-, during, and post-disaster planning and action. Furthermore, the survey intended to examine the LGUs' experiences accessing and using DRRM and CCA data in the existing digital platforms. A total of 72 LGU officials participated in the survey coming from 3 provinces and 37 city/municipalities. For the regional coverage of the LGUs that participated and a breakdown of LGU respondents, where almost 57.5% of LGUs were municipal-level[5], 36% were city-level[6], and 7.5% were province-level[7]. Questions related to DRRM and CCA data were also integrated into a nationwide survey on the readiness of LGUs for the Mandanas Ruling initiated by UNDP. A total of 549 LGUs participated in the survey. The DGS integrated the inputs of LGUs related to the scope of the study.

1.2 Findings of the DGS

The DGS revealed significant insights that provide more context on the current of the DRRM-CCA digital ecosystem in the country at the time of the project undertaking. It is intended to be a static snapshot that can be reassessed and updated by key stakeholders in the future.

As illustrated in the DGS, careful processing and analysis were done after gathering data from agencies' DDRRMM assessment and data inventory responses. In particular, after the responses were collected and collated, the back-end processing was automated to produce an output ready for dashboard visualization. This visualization supported the analysis of areas that agencies are already mature in and

4 DENR-BMB, DENR-MGB, DENR-NAMRIA, DOST-PAGASA, DOST-PHIVOLCS, NEA, NPC, Oscar M. Lopez Center (OMLC), PDC, and UPRI.

5 Balete, Aklan; Belison, Antique; Caramoan, Camarines Sur; Daraga, Albay; Diadi, Nueva Vizcaya; Dumarao, Capiz; Gubat, Sorsogon; Hungduan, Ifugao; Iguig, Cagayan; Itogon, Benguet; Jordan, Guimaras; Libungan, Cotabato; Magsingal, Ilocos Sur; Maramag, Bukidnon; Pandan, Catanduanes; Panganiban, Catanduanes; Prieto Diaz, Sorsogon; Rapu-Rapu, Albay; San Agustin, Isabela; Sigma, Capiz; Siruma, Camarines Sur; Solsona, Ilocos Norte; and, Zarraga, Iloilo

6 Baguio City, Benguet; Batangas City, Batangas; Cauayan City, Isabela; General Santos City, South Cotabato; City of Malabon, Rizal; Masbate City, Masbate; Naga City, Bicol; Navotas City, National Capital Region; Quezon City, National Capital Region; City of Sorsogon, Sorsogon; City of Tabaco, Albay; City of Tacurong, Sultan Kudarat; City of Valenzuela, National Capital Region; and City of Victorias, Negros Occidental

7 Agusan Del Sur, Caraga; Camarines Norte, Bicol; Catanduanes, Bicol

areas for improvement. For further contextualization, these opportunity areas were further illuminate with the significant qualitative findings from the guided interviews and survey responses from these agencies, allowing us to further understand the gaps and challenges that hinder their maturity journeys.

Figure 1 shows the significant gaps and issues confronting the Philippines' DRRM and CCA digital ecosystem and data governance, namely: i) the presence of overlapping functions across numerous digital platforms, data access, and sharing is not seamless; ii) limited human and financial resources capacities; and iii) formulating DRRM-CCA plans and conducting assessments are challenging for LGUs.

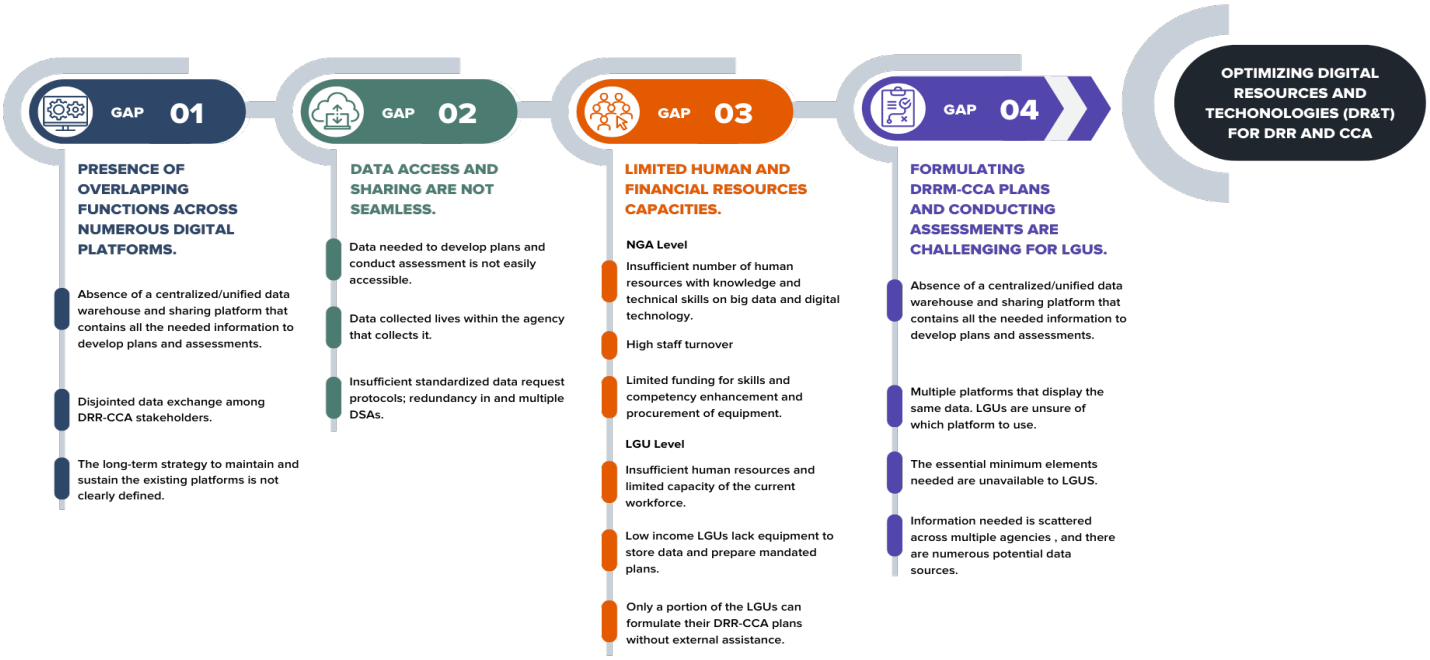

Figure 1: Gaps and Challenges in DRRM-CCA Data Governance in the Philippines

Presence of overlapping functions across numerous digital platforms.

The Data Flow Diagram (DFD) produced in the DGS demonstrates an absence of a centralized/unified data warehouse and sharing platform that contains all the needed information to develop plans and assessments. In sum, the DGS identified 15 web applications, one local application, 13 websites, and 16 flat files for a total of 46 data interfaces. These platforms and applications have overlapping functions, and the linkage between platforms is not clearly defined. Moreover, different platforms with overlapping functions, if not resolved would result in serious problems such as worsening the existing problem, lost opportunity cost, disjointed and unharmonized data exchange among DRRM-CCA stakeholders in the country.

The abovementioned governance issues have significant implications for vulnerable individuals who are differentially and disproportionately impacted by disasters. In a separate study commissioned by UNDP entitled, Mapping and Analysis of Vulnerable Groups for Climate Change Adaptation and Disaster Risk Reduction (CCA-DRR) in Support of the Digital Readiness Strategy in the Philippines, it was revealed that how having little or no access to online services due to multi-dimensional barriers that hinder their use of technologies. Also, the study found differing levels of technology access and digital literacy. For instance, there are digital interventions available, but they are oriented more towards the general public, and some resulting in widening the digital divide rather than closing it. The study highlighted that persons with disabilities, women, farmers, and fisherfolk, among others, require government support and access to life-saving and life-sustaining information. The study recognized that some might have access to and control resources to increase their capacity to adapt; still, a significant segment of the population is left behind and require further progress in this space, without intervention on approach, will only continue to widen the gap.

Data access and sharing are not seamless.

The second challenge is that data access and sharing is not seamless. The study revealed that data required to develop plans and conduct assessments are not easily accessible. This concern is inevitable given the presence of various platforms. Related to this point, the study found the lack of a central ledger/document/agency that orchestrates/manages data access. Data sharing is sometimes not digital, and much of the data is stored in servers that are on-premise, which is challenging to transfer because these servers are not remotely accessible. An implication of this is that those who require the data stored in those on-premise servers have to travel physically to the servers' location to access the data.

At the same time, the issue of access and sharing is also evident in the prevailing practice where in some cases, data collected lives within the agency that manages it and is not easily accessible to potential users. This practice is prominent both at the national and local government levels. At the national government level, stakeholders find it difficult to secure data from other agencies. Data sharing and access are restricted in some local government offices at the local government level.

Similarly, the study found the lack of a unified data framework resulting in fragmented and inadequate data management and cataloging systems within the agencies. The absence of such practices and features makes it difficult for other users to contextualize the data and use it to unlock other opportunities because protocols and routines differ from agency to agency. In addition, requesting data from agencies is not standardized due to the lack of a data-sharing framework and strategy. It resulted in redundancy and multiple data-sharing agreements (DSAs) created to access numerous datasets from other agencies. While multiple DSAs are not necessarily a problem, in this case it can be a symptom of the problem. Because the current ecosystem contains siloed and overlapping data flows and connections, the multiple DSAs add difficulty and complexity in coordinating data sharing efforts across independent platforms and agency-to-agency data flow relationships, especially when specific needs and data sharing methods are required for each agency. This not only hinders efficiency, but requires more manpower in the process. This is further supported by the DDRRMM framework, which cites "fragmented and uncoordinated deployment" as a barrier in DR&T maturity. The study likewise revealed the limited familiarity with ISO

standards across all elements, redundancies, and duplications in datasets within agencies, the data format is not standard across the agencies, and low capacity on big data capability - all making data access and sharing a significant challenge.

Limited human and financial resources capacities.

The third significant challenge is the limited human and financial resource capacities. The study found gaps that are common at both national and local levels: insufficient number of human resources with knowledge and technical skills on big data and digital technology; high staff turnover; limited funding for skills and competency enhancement and procurement of equipment; and insufficient data storage and data management practices. Additionally, at the LGU level, both as data generators and users have insufficient of human resources and the limited capacity of the current workforce are the primary factors that hinder LGUs from accessing information from existing digital platforms and developing the Climate and Disaster Risk Assessment (CDRA), Rapid Damage and Needs Assessment (RDANA), and the Post-Disaster and Needs Assessment (PDNA).

Formulating DRRM-CCA plans and conducting assessments are challenging for LGUs.

The LGUs play an important role as data generators. The exposure database they have could help improve existing platforms if they will share data to platform holders. Apart from being data generators, the LGUs are among the key data users. Thus, there must be an enabling environment to effectively, efficiently, and appropriately assess to formulate and develop required plans. However, the study found that for LGUs, preparing DRRM-CCA plans and conducting assessments are difficult. This is due to two reasons: Absence of a centralized/unified data warehouse and sharing platform that contains all the needed information to develop plans and conduct assessments; and, Multiple platforms display the same data, and LGUs are unsure which platform to use.

Given this, LGUs face significant challenges in creating their own localized exposure database, which contain granular data on their LGU, for the following reasons: Essential minimum elements needed are unavailable to LGUs; and, Data sources are provided to LGUs through a guidebook, but the information needed is scattered across multiple agencies and platforms, and there are numerous potential data sources. With this context in mind, the current human resources have significantly limited capacity for digital technologies. The study also found that only a portion of LGUs can formulate their Local Disaster Risk Reduction and Management Plan (LDRRMP) and Local Climate Change Action Plan (LCCAP) and develop CDRA without external assistance. Finally, the study revealed that with regards to the alignment of digital resources and technologies with DRRM coordination and collaboration, the combined overall maturity level of the Philippines - planned but with no resources available to achieve the capability. It clearly demonstrates the need to strengthen further institutional and individual capacities on using digital resources and technologies to advance DRRM-CCA in the country.

CHAPTER 2: Digital Readiness Strategy toward optimizing Digital Resources and Technologies in DRRM and CCA

Following the findings of the DGS, this section presents the Digital Readiness Strategy (DRS) to optimize the use of digital resources and technologies towards achieving the national DRRM vision of - *safer, adaptive, disaster-resilient Filipino communities toward sustainable development.*

In October 2020, the National Disaster Risk Reduction and Management Council (NDRRMC) approved the National Disaster Risk Reduction and Management Plan (NDRRMP) 2020 - 2030. The plan is the updated version of the NDRRMP 2011 - 2028. The revised plan links disaster risk reduction and management (DRRM), climate change adaptation (CCA), and human security by focusing on climate and disaster risks. It aims to achieve the shared goals in risk reduction, resilience building, human security, and sustainable development (NDRRMC 2020). As the primary blueprint for DRRM in the Philippines, the plan: provides strategic direction and guidance to national government agencies (NGAs), local government units (LGUs), civil society organizations (CSOs), private sector, and development partners on disaster and climate-resilience actions in the Philippines; strengthens disaster and climate risk governance by clarifying the roles, accountabilities, strategies, and activities of disaster risk reduction and management (DRRM) stakeholders at all levels; strengthens linkages and interoperability of the DRRM thematic pillars; ensures the convergence of and synergy between DRRM and CCA; and, contributes to the achievement and coherence of global, regional, and national development and policy agenda (NDRRMC 2020).

During the review of the NDRRMP 2011-2028, data governance-related concerns such as the unavailability of science-informed and evidence-based risk maps and lack of access to data and knowledge management system are manifested as among the critical gaps and challenges in the implementation of DRRM in the country. Further, the data access and awareness and the ability of communities to use digital technologies and solutions were identified as crucial gaps. In recognition of the pivotal role of data in risk governance, the NDRRMP 2020-2030 emphasizes strengthening the digital infrastructure and ecosystem not only to address data governance issues but to ensure that vulnerable and marginalized communities will experience the benefits of digitalization and technological solutions so that no one will be left behind. In particular, the plan sets a clear mandate and direction to address data governance issues and concerns through advancing digital transformation to achieve the NDRRMP's vision. Increased investments in digital infrastructure, digital readiness, data governance, and addressing the digital divide are indispensable to achieving this. The NDRRMP 2020 - 2030 also promotes robust data governance mechanisms to address challenges on the data source, access, quality, sharing, distribution, and use in risk reduction.

As shown in **Figure 2**, Outcome 1 of the NDRRMP 2020 - 2030 - *Improved access, understanding, and use of updated risk information, DRR-related statistics, and research* - prioritizes data governance-related outputs such as Output 1 on Disaster and climate-risk information, Output 2 on Information management and systems, and Output 3 on Standards of DRR-related statistics. Ultimately, upon effective and efficient implementation of the plan, national stakeholders, including marginalized communities, are expected to benefit from the following outcomes:

1. Strengthened mechanisms, policies, and institutional arrangements for promoting interoperability of DRRM-CCA platforms, centered on the National Disaster Risk Reduction and Management Council (NDRRMC) through streamlined processes and informed recommendations for data code standardization;
2. Enhanced evidence-based decision-making support to NDRRMC, particularly for data management and data flow-related matters, through a data roster and data flow diagram, among

Figure 2: Digital Readiness Strategy Framework

NDRRMP 2020-2030

National DRMM Vision	Safer, adaptive, and disaster-resilient Filipino communities toward sustainable development.
NDRRMP Outcome 1	Improved acess, understanding, and use of updated risk information, DRRM-related, and research

Digital Readiness Outcomes

Governance		People	Technology	
Strengthened mechanisms, policies, and institutional arrangements for promoting interoperability of DRRM-CCA platforms centered on NDRRMC through streamlined processes and informed recommendations for data code standardization.	Enhanced evidenced-based decision-making support to NDRRMC on date management and flow matters	Broadened stakeholder engagement and set up for future collaboration on digitalization on DRRM-CCA.	Advanced digital transformation through the accelerated use of technological and media on DRRM-CCA.	Institutionalized national data infrastructure.

Strategies

Workstreams

Governance

- Establish a unified interagency Data Governance framework
  - **NGA level:** Standardize the methodology used in creating DRRM-CCA plans
  - Gather data user and generator requirements and draft and sign DSAs, ensuring adherence to data privacy principles
  - Establish the requirements, protocols, and architecture needed to scale GeoRiskPH's capacity
- Ensure data quality
  - **NGA level:** Standardize the methodology used in creating DRRM-CCA plans
  - Establish the requirements, protocols, and architecture needed to scale GeoRiskPH's capacity
- Identify and reduce duplications and overlaps in datasets
  - **NGA level:** Establish the requirements, protocols, and architecture needed to scale GeoRiskPH's capacity
- Standardize and monitor LGU planning and assessment
  - **NGA level:** Establish the requirements, protocols, and architecture needed to scale GeoRiskPH's capacity
  - **LGU level:** Establish exposure database guidelines based on the standardized DRRM-CCA methodology
- Strengthened institutional partnerships for DRRM-CCA
  - **NGA level:** Gather data user and generator requirements and draft and sign DSAs, ensuring adherence to data privacy principles
  - Establish the requirements, protocols, and architecture needed to scale GeoRiskPH's capacity
  - Connect priority data interfaces and execute the capacity building campaigns
  - **LGU level:** Facilitate help desk access.

People

- Build and strengthen NGA human capital
  - **NGA level:** Connect priority data interfaces and execute the capacity building campaigns
- Support and capacitate LGU human resources
  - **LGU level:** Create shared learning documents
  - Select a group of LGUs who will for capacity building activities
  - Provide needed resources to the group of LGUs.
  - Launch capacity building activities for LGUs.
  - Facilitate help desk

Technology

- Bolster resources to improve ICT infrastructure
  - **NGA level:** Build additional data warehouse features and plan for the facilitation of data interface connections
  - **LGU level:** Determine the baseline LGU resource capacities needed to follow the established guidelines
  - Provide needed resources to the group of LGUs.
- Integrate the DDRRMM framework and dashboard
  - **NGA level:** Establish the requirements, protocols, and architecture needed to scale GeoRiskPH's capacity
  - Build additional data warehouse features and plan for the facilitation of data interface connections
  - **LGU level:** Establish exposure database guidelines based on the standardized DRRM-CCA methodology

other products and tools;

3. Broadened stakeholder engagement and set up for future collaboration on digitalization of DRRM-CCA:
4. Advanced digital transformation through the accelerated use of technologies and media in DRRM-CCA; and,
5. Institutionalized national data infrastructure.

The abovementioned policy pronouncements reflect the government's commitment to optimizing the use of digital resources and technologies in DRRM-CCA while considering the whole-of-government and whole-of-society approaches.

The following sections present the DRS in detail as shown in **Figure 2**.

2.1 Three-pronged Strategy for Digital Readiness

As described in the DDRRMM White Paper, digital maturity is a function of technology features, business processes, and an enabling environment. In the context of the findings of the Data Governance Study, a three-pronged strategy was developed to more easily understand and group the identified gaps and challenges as well as articulate the recommendations. This three-pronged strategy adopts the technology aspect of the DDRRMM, groups the business processes and enabling environment of the DDRMM under governance, and also includes a component highlighting people in the system. The latter addition comes from the findings that there is significant opportunity to build and strengthen the competencies, capacities, and resources for agency staff and users within the DRRM-CCA ecosystem.

Aside from utilizing the DDRRMM as a tool to measure the institutional capacity of agencies, mapping the data through the data flow diagram also provided a different lens to analyze the ecosystem, particularly the relationships and connections between and among the data generators and users. The investigative approach and questions presented by the DFD added more qualitative context to the gaps and challenges,

and provided more information in developing the recommendations under the three components of the strategy.

This chapter presents the said three-pronged strategy for digital readiness. **Technology** refers to the technical infrastructure and data, while **people** refers to human capital, and **governance** refers to how the two other elements are managed or maintained. All components work together to ensure that the proposed DRS can be sustained indefinitely despite being dynamic with multiple stakeholders with different mandates or objectives.

The strategy detailed in this chapter builds on the previous initiatives with similar objectives. The key differentiator of the DRS is its holistic approach to addressing problems. Unlike previous projects which leaned into only one of the three prongs (i.e. Technology, People, and Governance), the workstreams recognizes that all three interact and affect one another. The impact of solving the issues under one prong has historically been lackluster. Combining the outputs of past initiatives, the DRS' holistic approach, and the support of all stakeholders, the vision of safer, adaptive, disaster-resilient Filipino communities toward sustainable development is achievable.

Governance

The governance component, as mentioned above, covers processes and the enabling environment that encourage DR&T maturity. In this case, this captures the need to develop a unified interagency Data Governance Framework, ensure data quality, identify and reduce duplications and overlaps of datasets in the ecosystem, standardize and monitor LGU planning and assessment, and strengthen institutionalization and partnerships for DRRM.

As previously discussed, these strategies are based on the findings of the DDRRMM results and the DFD. In particular, there is a need for a unified interagency Data Governance framework to address fragmented mechanisms in the system, which have resulted in siloed data platforms and redundancies

in datasets, data exchange and flows, and data sharing agreements. Part of this component is the need to ensure data quality to address insufficiencies in quality assurance/assessment, data standardization protocols, storage and management practices, and the absence of established feedback mechanisms.

As part of governance, there is also a need to better support LGUs to strengthen their roles as data generators and users, as well as in their need to prepare and complete the CDRA and other planning and assessment outputs. Related to this, the governance component emphasizes the need to strengthen institutionalization and partnerships for DRRM to address the siloed initiatives and establish the feedback mechanism for stakeholders. Because the seventh DDRRMM component on Alignment with DRR Coordination and Collaboration is the lowest score for the Philippine agencies at the time of this study, there is significant room to improve the collaborative efforts of the DRRM-CCA agencies.

People

Under the second component of the strategy, ensuring the availability and sufficient capacities of users and staff are emphasized. In particular, this component highlights the need to build and strengthen the human capital of national government agencies as well as the need to support and capacitate the human resources of local government.

Based on the DDRRMM and DFD results of the DGS, these recommendations stem from the findings that agencies have low capacity for big data capability and machine learning knowledge and skills, insufficient human resources with expertise and technical skills on big data and digital technology. Additionally, it was found that there was high staff turnover in multiple agencies and limited funding allocated for skills and competency enhancement.

As for the local government units, the study also found limited funding for skills and competency enhancement and only a portion of LGUs with the resources and capacity to formulate DRRM-CCA plans and assessments without external assistance.

For both national and local government, the strategies in this component are meant to complement those in the governance component as well. The right staff means identifying and onboarding critical stakeholders with the right skills, experience, and motivation to establish and implement a unified framework on data governance, access, and sharing. Capacitating the right people means providing proper training and strengthening user competencies through a comprehensive and coherent human resource capability-building framework and supported institutionalization and partnership programs. The recommended strategies under the **people** ensure that people in the government can understand, process, and communicate insights from data to other people regardless of their affiliations and occupations.

Technology

Lastly, the third component is **technology**, which aims to bolster resources and improve the ICT infrastructure in the DRRM-CCA ecosystem, and integrate and adapt the DDRRMM framework and dashboard as a tool to monitor and guide the digital maturity of stakeholders.

It should be emphasized here that while the scope of the study's findings emphasizes the digital ecosystem of DRRM-CCA in the Philippines, technology is just one component of the system of solutions. The overall framework aims to provide a more comprehensive view and approach to the gaps and challenges, with technology as one of the three overall components as a means to bring the ecosystem to a higher level of maturity.

From the findings of the DGS, it was found that there are insufficient funds that limit the procurement of software and hardware as well as the enhancement of skills and competencies. In addition, the study found that most respondents of the DDRRMM framework were not familiar with the relevant ISO standards for DR&T–an indicator that an agency is nearing or has achieved its optimal state of digital maturity.
With that, one of the central recommendations in this component is the establishment of a DRRM system with a centralized and interoperable data warehouse, which will require the allocation of sufficient

financial resources to bolster the agencies' current information and communications technology (ICT) infrastructure, each according to their present maturity levels. In achieving this and in taking the overall strategy further, the DDRRMM Dashboard can be leveraged to support and guide agencies in improving their maturity levels across the use of digital resources and tools. This way, government agencies can not only direct their improvements towards compliance with international standards but also strengthen their coordination, collaboration, and alignment with one another towards this goal. For example, the DDRRMM results show that the current maturity score of the Philippines is 2.76 out of 5, based on the agencies that participated in the study. Stakeholders can zoom in to see where specific agencies can improve on. For instance, a cross-cutting issue for DOST-PAGASA, DOST-PHIVOLCS, OCD, and UPRI is ICT infrastructure, based on their scores showing that there is insufficient implementation for computing and network infrastructure. Boosting this through additional resources for full implementation, performance assessment, and compliance with national standards will increase the score from the 2-3 range (Recognized or Defined) to 5 (Optimized).

2.2 Towards the Ideal High-Level System Structure for DRRM Data

2.2.1 Recalling the NDRRMP Outcome Indicators and DRRM Ecosystem Stakeholders

Outcome 1 of the NDRRMP is "Improve access, understanding, and use of updated risk information, DRR-related statistics, and research." Many of the indicators that demonstrate the achievement of this outcome involve the active participation of LGUs as both data users and data generators and the accomplishment of requisite tasks. These indicators, as stated in the NDRRMP, are as follows:

- Percentage of municipalities with an improved understanding of hazard and risk information;
- Percentage of the 42,045 barangays with improved access to accurate hazards and risk information in online mapping platforms by 2022;
- Percentage of healthcare facilities/hospitals with improved access to hazard and risk assessment data present in the area;
- Integrated system for risk information and research to inform the planning process in formats accessible to all stakeholders;
- Percentage of indicators aligned to international and national DRRM frameworks covering the access, understanding, and use of updated risk information and research; and,
- Percentage of LGUs that align reporting to the international and national DRRM frameworks covering the access, understanding, and use of updated risk information and research.

The DGS recognizes the role of LGUs and portrays their importance by establishing that LGUs are one of the core data users within the system since access to information is crucial in crafting data-driven policies and programs. Furthermore, as emphasized by members of the Technical Working Group, LGUs are also data generators that play a critical role in providing information back to the NGAs. The DFD of the DGS revealed that LGUs have not been able to serve as data generators due to constraints in resources and

human capacities.

Aside from acknowledging the role of LGUs, the DGS surfaces the involvement of other stakeholders such as various NGAs, CSOs, the private sector, and the public. These stakeholders have been consuming data through data interfaces accessible to them. This has resulted in the proliferation of various platforms that fulfill their specific needs with limited options to give back to their providers of data. The proposed system addresses this by granting potential governmental and non-governmental contributors (e.g. scientists, mappers) a secure and automated avenue to provide data. All stakeholders are accounted for in creating the proposed, ideal, high-level structure.

The NDRRMP also highlights the importance of one integrated information system between various NGAs, including DENR-NAMRIA, DENR-MGB, DOST-PAGASA, and DOST-PHIVOLCS, among others. The proposed structure extends this feature to other stakeholders to better facilitate the achievement of the national vision mentioned above.

2.2.2 Connecting the DGS Findings to the Ideal System Structure

The previous chapters describe the aspects that characterize a mature DR&T system and how these characteristics combined with the identified areas of improvement, evolved into three strategic foci. Using the findings of the DGS, this chapter aims to provide a more detailed sequence of activities that bridges the gap between the present situation and a more optimal setup, where a DRRM system containing a centralized data warehouse and complementary data interfaces is the main output.

An optimal setup implies that a DRRM ecosystem in a country is mature which signifies that people, technology, and governance aspects of the framework are harmonious working together. In the NDRRMP, this is encompassed in Outcome 1 of Thematic Area I: Disaster Prevention and Mitigation. Combining this component of the NDRRMP with the DDRRMM framework reveals a more concrete picture of the gaps in the Philippines' DRRM Ecosystem.

The identification of these gaps were done through the DGS, where four main barriers were identified.

- Presence of overlapping functions across numerous digital platforms
- Data access and sharing are not seamless
- Limited human and financial resources capacities
- Formulating DRRM-CCA plans and conducting assessments are challenging for LGUs

To fill the identified gaps and achieve the national vision, there needs to be a sustained DRRM system that ensures the quality and integrity of data, while facilitating data exchange and information sharing for the benefit of government units, development partners, and non-government stakeholders. **Table 1** provides direct high-level solutions to the gaps from the DGS.

A strategy involving a DRRM system that encapsulates the enumerated solutions in Table 1 is described in the succeeding sections of this paper. The DRRM system needed is described through the ideal high-level system structure and the high-level activities and timelines are presented in the workstreams.

Gaps identified in the DGS	High-level Solution
Presence of overlapping functions across numerous digital platforms	Identify and sustain specific data interfaces or platforms that provide functions that fulfill the requirements of specific users
Data access and sharing are not seamless	Create and sustain a system that automatically consolidates, retrieves, and provides data to and from different users and providers
Limited human and financial resources capacities	Provide support and resources to government units that do not meet the standards needed to participate in the desired DRRM system
Formulating DRRM-CCA plans and conducting assessments are challenging for LGUs	Streamline assessments and ensure that data requirements are accessible

Table 1. High-level solutions that address the gaps identified in the DGS

Case Studies of National Digitization Efforts

The examples presented below are nationwide efforts that leverage technology as a means to solve multidisciplinary problems covering applications in mobility, security, healthcare, education, manufacturing, and governance among other areas. In all three examples, technology, when supplemented with the appropriate systems and support in place, served as an enabler of solutions that harmonized different facets of society.

- Estonia's X-Road project is the backbone of the country's digitalization. The ability to bridge different information systems to service different parts of Estonian society is at the core of X-Road.
- Thailand 4.0 is an economic model that aims to overcome several of Thailand's most pressing challenges through innovation, technology, and creativity as drivers of a value-based economy.
- The Australian Spatial Data Infrastructure (ASDI) is a national framework that aims to bridge spatial data providers to all sectors of society.
- Japan's 5th Science and Technology Basic Plan which describes Society 5.0, "A human-centered society that balances economic advancement with the resolution of social problems by a system that highly integrates cyberspace and physical space."

2.2.3 The Ideal High-level System Structure

Based on the DDRRMM framework, every mature DR&T ecosystem has 6 characteristics: full support to DRRM, a platform for development, scalability, shared geospatial infrastructure, adaptability, and creditability. The high-level solutions found in **Table 1** also present two additional requirements for the ideal DRRM system.

- Presence of data interfaces or platforms that provide functions that fulfill the requirements of specific users
- Availability of features to automatically consolidate, retrieve, and provide data to and from different users and providers

The enumerated characteristics and requirements both point to a system that centralizes the retrieval, storage, and provision of data to and from multiple data sources. Focusing solely on the technological aspect of the system, three major components are needed in the system. One is for data storage, second is the data processing components, and the last is the means to transport the data in and out of the storage solution through a data interface.

Two digital storage options can serve the needs of this system, a data lake and a data warehouse. The latter is more scalable and more easily maintainable in the long run due to a data warehouse's structured nature. As for the data interface, this can be as simple as a form submission or as complex as a dedicated web platform with cross platform functionalities. The feature that enables this is the data processing component within the system. Different data interfaces will require different data processing components and data interface features will vary depending on the needs of the high priority stakeholders.

Regardless of the more granular requirements, the ideal high-level system structure will remain the same. **Figure 3** shows the proposed ideal high-level system structure. **Table 2** describes the components of **Figure 3**.

Component	Example	Description
Entity Type	NGA, LGU, CSO	Real-world persons, organizations, agencies, and companies that create, use, or process data
Entity Attribute	Data User, Data Generator	Represents how an entity interacts with data
Data Interface	Web Application, Website, API	Represents the different mechanisms used to access data

Table 2: Components from the Data Flow Diagram

The data ecosystem portrayed in the Data Flow Diagram (DFD) of the DGS contained several components as representations of real-world organizations, connections, and tools. The succeeding sections use the same features to describe the ideal high-level system structure of a mature DR&T ecosystem for the Philippines. Those components are streamlined and enumerated in **Table 2** with descriptions of what they represent.

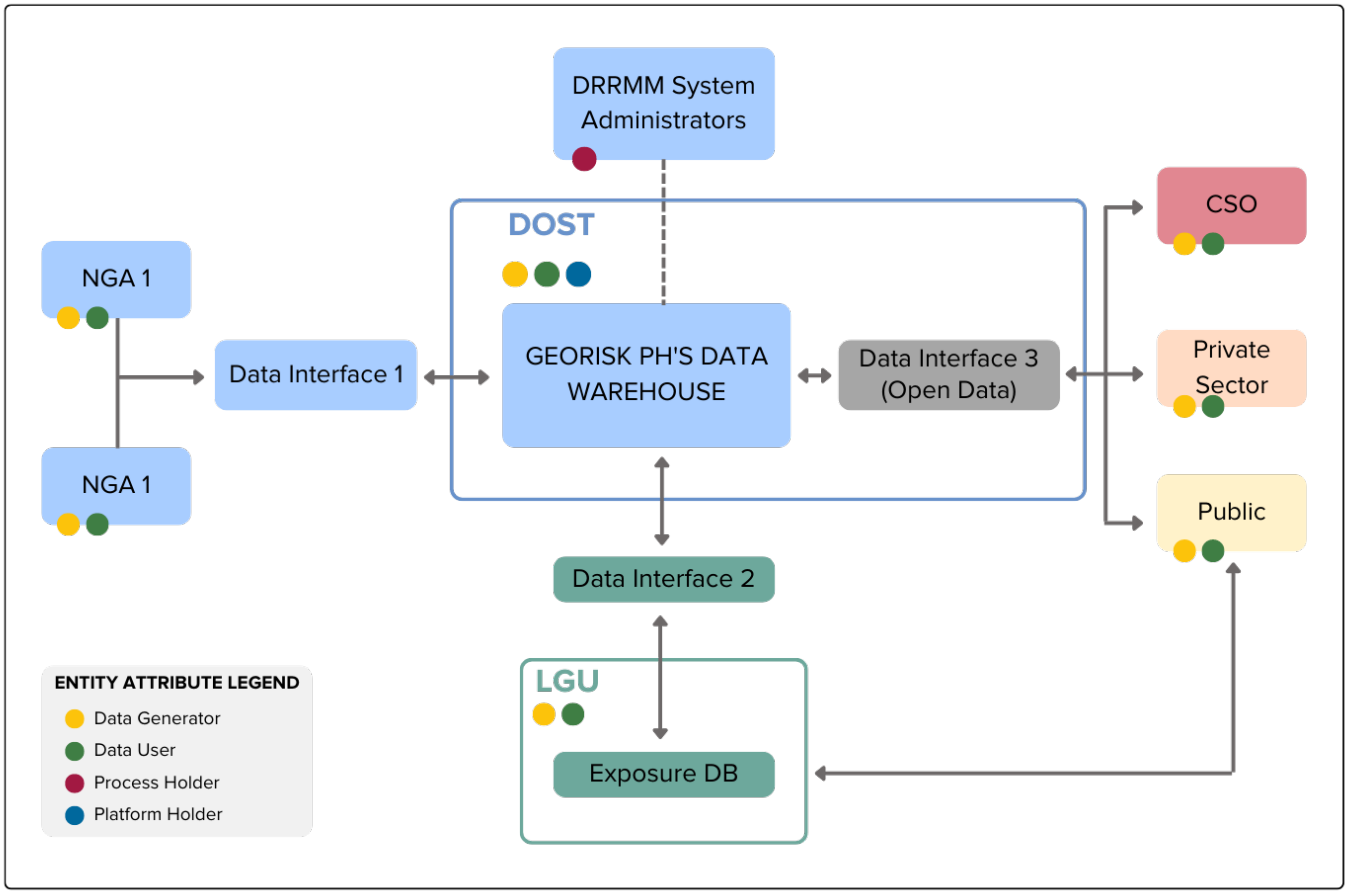

Figure 3: Ideal High-level System Structure of the Philippines' DRRM System

At the center of this ideal high level DRRM system structure is the centralized data warehouse; particularly DOST's GeoRiskPH's Data Warehouse. The data warehouse connects to different data interfaces used by several users to fulfill their varying needs. They share a single source of data that adheres to predetermined standards.

The recommendation to use GeoRiskPH comes from the DGS' findings which revealed that GeoRiskPH is the most connected data interface compared to all other data interfaces in the DRRM-CCA ecosystem of the Philippines. GeoRiskPH also has the needed infrastructure, technology, and data management practices based on the DDRRMM framework. An expansion of GeoRiskPH's current features to accommodate more data and data interfaces would be required to fulfill its mandate as the "central source of information for accurate and efficient hazards and risk assessment."

DOST and the DRRM System Administrators are two other entities crucial to establishing this structure. As the overall steering and leadership of the NDRRMC's Disaster Prevention and Mitigation pillar, DOST shall serve as the platform holder of this technology. GeoRiskPH is already hosted using DOST's resources, which holds true today. However, scaling the platform may require a new data architecture and additional resources. The ownership of the data warehouse comes hand-in-hand with their ability to generate and use the data within the data warehouse.

The second entity is referred to as DRRM System Administrators. This would be a group of representatives from different government agencies that partake in the DRRM-CCA space in one form or another. These government agencies should include but are not limited to the OCD, DENR-NAMRIA, DENR-MGB, DOST-PAGASA, DOST-PHIVOLCS, DILG, and PSA. The DRRM System Administrators are the primary process holders of the central data warehouse. As the technical experts, the current developers of GeoRiskPH can be absorbed into this team of DRRM System Administrators and lead the changes in terms of engineering requirements. Their responsibilities include managing the data warehouse's schema, facilitating access and permissions to the data, handling data-sharing partnerships with stakeholders, and implementing requested changes involving the data warehouse and its content.

The remaining entities in **Figure 3** are arbitrary entities representing the stakeholders in the DRRM-CCA ecosystem. They are all categorized as data users and data generators. This indicates that the entities connected to the data warehouse can provide data or use the data from the data warehouse. The specific permissions can be configured depending on the use case.

Lastly, the data interfaces in **Figure 3** represent tools and mechanisms that fulfill the requirements of the data entities. These requirements can include sending, storing, receiving, processing, transforming, and visualizing data. The owners of these interfaces are the data generators themselves, except for Data Interface 3, which DOST owns as a means of adhering to the G8 Open Data Charter, which categorizes geospatial data, earth observation data, and energy and environment data as high-value datasets.

It is important to note that the indicated data interfaces broadly represent a means to connect to the data warehouse rather than a representation of a specific platform or technology.

2.3 Workstreams

Based on the data collection activities of the DGS, many of the technologies required to have a mature DR&T ecosystem are already present in some national government agencies. The DDRRMM scores portrayed on the DDRRMM Dashboard support this. However, a holistic adoption of technologies, data-sharing practices, multi-agency collaboration, and sustained capacity building and resource initiatives, among other factors, are some of the missing attributes of the DRRM-CCA ecosystem in the Philippines.

The ideal structure proposed in the previous section addresses these deficiencies, but such structures can only be attained once the proper foundation is established. The subsequent parts of this chapter propose a high-level roadmap that bridges the gap between the prevailing system and a more optimal arrangement. Requirements that serve as foundational pillars can also be found in the roadmap.

As shown in **Figure 4**, the roadmap is divided into two parallel workstreams. Both workstreams are executed simultaneously while following the sequence denoted by the arrows.

The first workstream is the NGA workstream. The primary focus of this workstream is the creation of the central data warehouse and populating this with data from sources that are already well established. The second workstream is the LGU workstream which aims to capacitate LGUs to create and execute DRRM-CCA plans easily. The goal is for LGUs to eventually contribute to the data warehouse as a data source. Doing so will provide NGAs a more accurate understanding of the impact of disasters based on the LGUs' localized, on-the-ground data.

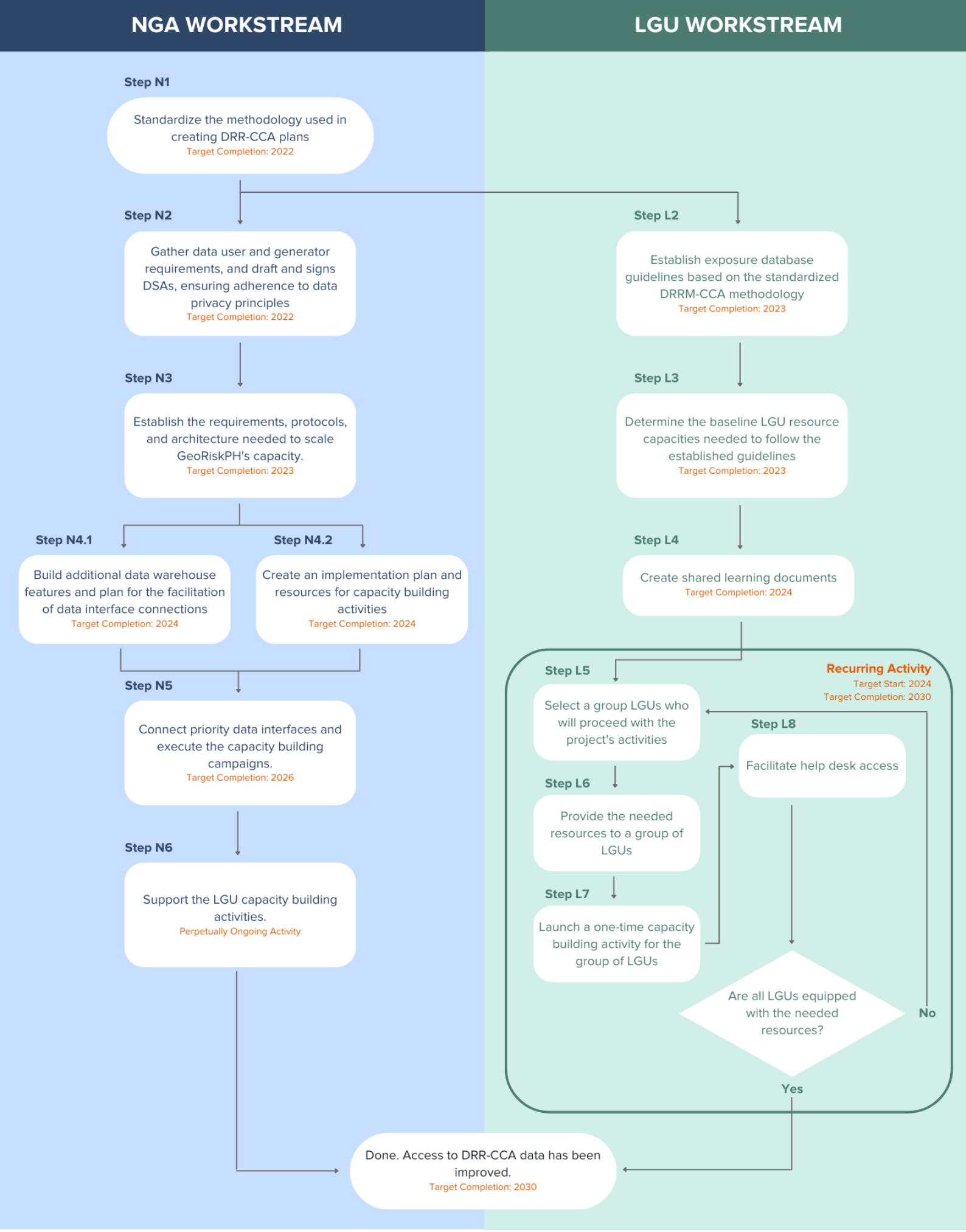

Figure 4: Parallel Workstreams for NGAs and LGUs alongside NDRRMP Timeline

Table 3: Strategies for Digital Readiness

GOVERNANCE			
Strategies	**How to concretely undertake this strategy?**	**What data governance gaps do this strategy address?**	**Relation of recommended strategies to the DDRRMM Assessment Findings**
Establish a unified interagency Data Governance framework	NGA Workstream Step N1, Step N2 & Step N3	• Fragmented mechanisms and systems on data cataloging and discovery; • Redundancies and duplications in their current datasets; • Presence of multiple DRRM-CCA digital platforms that display the same data; • Data exchange among DRRM-CCA stakeholders is not seamless; • Requesting data from agencies is not standardized; • Redundancies in multiple DSAs were created to access numerous datasets from other agencies; and, • Lack of clear data storage and data management practices.	• Maturity level on data governance framework is Defined or planned and with resources available to achieve the capability. While maturity rating on data governance is 54 points or Defined. • Most agencies are not familiar with the ISO standards on fundamental data model specifications. • On data/domain business alignment, there are redundancies and duplications in the current datasets. Most agencies also emphasized that they are not cognizant of the ISO standard on it. • Existing DRRM and CCA digital platforms have their respective mechanisms and systems on data cataloging and discovery, mainly owing to the lack of a unified framework. • On data maintenance framework, most of the agencies rated this element as mainly Ad hoc (26.3%). Other agencies classified their respective institutions as either Managed (21.1%), Defined (21.1%), Recognized (15.8%), and Optimized (10.5%). • Data transfer protocols are not standard across the agencies. Some NGAs use ArcGIS API while some use CSV files with no pre-defined schedules or transfer platforms (i.e. email, Google Drive, USB).
Ensure data quality	NGA Workstream Step N1 & Step N3	• Poor mechanism for interagency data quality assurance/assessment and quality control; • Data format is not standard across the agencies; • Lack of clear data storage and data management practices; and, • Absence of established feedback mechanisms.	• General level of maturity on data quality and availability is 56 points or Defined. • Data collected lives within the agency that manages it. There is a poor mechanism for interagency data quality assurance/assessment and quality control. The study further reveals the absence of a well-defined agency to track the LGUs' progress and compliance with CDRA. This entails that CDRAs developed may not have undergone quality assurance/assessment and quality control.
Identify and reduce duplications and overlaps in datasets	NGA Workstream Step N3	• Redundancies and duplications in their current datasets; and, • Presence of multiple DRRM-CCA digital platforms that display the same data.	• DRRM and CCA application portfolio in the Philippines is 63 points or Managed. This score owes to the various digital applications in the Philippines developed and introduced to improve the planning process and increase people's preparedness, among others. • However, there is an absence of a centralized/unified data warehouse and sharing platform that contains all the needed information to create a plan/assessment. Also, multiple platforms display the same data. LGUs are unsure of which platform to use. Furthermore, existing data platforms have overlapping mandates and functions. Moreover, the link between platforms and the long-term strategy to maintain and sustain the existing platforms is unclear

GOVERNANCE			
Strategies	**How to concretely undertake this strategy?**	**What data governance gaps do this strategy address?**	**Relation of recommended strategies to the DDRRMM Assessment Findings**
Standardize and monitor LGU planning and assessment	NGA Workstream Step N3 LGU Workstream Step L2	• Data on the number of LGUs that do not have CDRA is not available.	• Absence of a centralized/unified data warehouse and sharing platform that contains all the needed information to create a plan/assessment.
Strengthen institutionalization and partnerships for DRRM	NGA Workstream Step N2, Step N3 & Step N5 LGU Workstream Step L8	• Absence of established feedback mechanisms; and, • Redundancies in and multiple DSAs.	• Overall maturity rating on the stakeholder management and collaboration sub-component is 57 or Defined. This maturity rating indicates that respondents value collaboration and partnerships as essential aspects of optimizing DR&T in DRR. • On internal coordination/ collaboration function or whether the organization has a DR&T coordination function and/or committee to rationalize frameworks and development, access, and maintenance of DR&T assets, most respondents regard their maturity level as Ad hoc (36.8%). • As for external stakeholder framework or if the organization embraces collaboration as an organizational-wide culture and has a formal framework or protocol for DR&T strategic partnership and alliance as part of its operational model, most respondents (31.6%) considered their maturity level on this element as Ad hoc. • On stakeholder engagement or whether the organization adopts standard processes and tools for stakeholder engagement (both internal and external) and different types of partnerships in DR&T, KPIs in place for assessing and improving how DRRM institution effectively manages collaboration opportunities with local, national, and regional partners in the development and operation of data, infrastructure, and applications to leverage benefits and return of investments in DR&T- most of the respondents (36.8%) rated their maturity level on this element as Ad hoc. • Regarding protocols and agreements or whether the organization executes different protocols for data sharing, interoperability, license sharing, and other like service and collaboration agreements meant to maintain effectiveness and minimize cost and redundant functions - 26.3% appraised their current capability as Optimized, 26.3% ranked Managed, 21.1% considered this as Ad hoc, 15.8% as Defined, and 10.5% assessed their maturation level as Recognized.

PEOPLE			
Strategies	**How to concretely undertake this strategy?**	**What data governance gaps do this strategy address?**	**Relation of recommended strategies to the DDRRMM Assessment Findings**
Build and strengthen NGA human capital	NGA Workstream Step N5	• Low capacity on big data capability; • Machine learning knowledge, skills, and application are yet to be acquired; • Lack of sufficient human resources with expertise and technical skills on big data and digital technology; • High staff turnover; and, • Limited funding for skills and competency enhancement.	• The overall maturity level score for the sub-component on the Competency Framework is 60 or Defined. • On big data competencies [E51] or the users within the organization at various levels understand the benefits of big data and are familiar with the various technical aspects relevant to the job they perform - most of the agencies ranked their maturity level as Optimized (26.3%). According to the respondents, they currently lack big data analytical capabilities. • Regarding training plans or if the staff have access to ongoing training to maintain and develop their technical and operational knowledge, skills, and abilities, the ratings demonstrated that most of the respondents (36.8%) classified their maturity as Managed. In comparison, 21.1% assessed their institutional capacity as Optimized, 21.1% Recognized, 15.8% Ad hoc, and 5.3% Defined. • With respect to training utilization/performance assessment or the organization routinely executes performance appraisal to assess training effectiveness, decisions for tenure are based on clear criteria for work performance and acquired competencies - a total of 36.8% of the respondents considered this level as Managed. Meanwhile, 21.1% rated Optimized, 21.1% identified this element as Recognized, and 21.1% as Ad hoc.
Support and capacitate LGU human resources	LGU Workstream Step L4, Step L5, Step L6, Step L7, and Step L8	• Limited funding for skills and competency enhancement; and, • Only a portion of the LGUs can formulate their DRRM-CCA plans without external assistance.	• Insufficient number of human resources with knowledge and technical skills on big data and digital technology; high staff turnover.

TECHNOLOGY			
Strategies	**How to concretely undertake this strategy?**	**What data governance gaps do this strategy address?**	**Relation of recommended strategies to the DDRRMM Assessment Findings**
Bolster resources to improve ICT Infrastructure	NGA Workstream Step N44.1 LGU Workstream Step L3 & Step L6	• Insufficient funds limiting software and hardware procurement	• Computing infrastructure level of maturity is Defined or 58 points. Concerning the element on the management of infrastructure or the institution's computing infrastructure is actively managed against standardized management practices that comply with ISO 13485:2016 (sections that cover process equipment (both hardware and software) and supporting services (communication or information systems) - the most number of respondents considered this as Ad hoc (31.6%). On the other hand, 26.3% rated their maturity level as Managed. A total of 15.8% ranked their level as Recognized. In comparison, 21% of the respondents classified themselves as either Optimized or Defined. With reference to the element of budget or the institution has adequate budget and funding for the procurement, upgrade, operation, and maintenance of its computing infrastructure - Ad hoc was the rating provided by most of the respondents (26.3%). • Overall maturity rating on network infrastructure is 54 points or Defined. • On computing infrastructure for big data processing the overall maturity level ranking is 52 points or Defined.
Integrate and adapt the DDRRMM framework and dashboard	NGA Workstream Step N3 & Step N4.1 LGU Workstream Step L2		• Most respondents are not familiar with the ISO standards specified in the elements; • Low alignment to DRRM–despite all investment or progress in technology, the gain (and how this leads to improvement in DRRM) is not significant; and, • Limited funding for skills and competency enhancement and procurement of equipment.

2.3.1. The National Government Agency Workstream

Step N1: Standardize the methodology used in creating DRRM-CCA plans.

The first step that initiates the entire plan is the standardization of the methodology used to create DRRM-CCA plans. This is in line with the NDRRMP's activity concerning the *Standards of DRR-related statistics* output. To some extent, some recommendations and guidelines make creating the DRRM-CCA plans possible. However, the process is still difficult due to the lack of specificity regarding the formulas, units of measurement, data types, and data sources.

Example: Ready to Rebuild: Disaster Rehabilitation and Recovery Planning Guide Workbook

The guidebook was created through a joint project between the NDRRMC, the OCR, and the World Bank, to provide a rehabilitation and recovery framework to LGUs and NGAs. The guidebook presents well-devised action points on pre-disaster and post-disaster rehabilitation and recovery. However, Annex A, which contains the data requirements, lacks the specificity needed to be database-friendly. **Figure 5** provides a screenshot of this annexed table. The absence of a defined formula, units of measurement, and absolute data sources can be seen.

Annex A. Data Requirements (continuation)

CORE ELEMENT	SECTOR	DATA	DETAILS	SOURCE
General Information		Total Population	Disaggregated data by urban/ rural, subdivision (up to *barangay* level), age group, and gender	PSA, CBMS
		Population Density		PSA
Land Use and Physical Environment	Settlement	Settlement Areas	Disaggregated data by subdivision (up to *barangay* level) with corresponding population count by individuals/ families; land use/ zoning map	CLUP, DENR-BMB, PSA, LMB, NAMRIA

Figure 5: Pre- and Post-Disaster Rehabilitation and Recovery Guidebook

The expected outputs of this step of the project are as follows:

- Guidelines containing the standard minimum data requirements, methodology, metrics, units of measure, and specific data sources

Step N2: Gather data user and data generator requirements, and draft and sign DSAs, ensuring adherence to data privacy principles

For Step N2, the agencies will need to discuss and gather the data user and data generator requirements for data sharing, which must adhere to the data privacy principles in the Data Privacy Act of 2012, its Implementing Rules and Regulations (IRR), and all issuances of the National Privacy Commission (NPC). These should then be drafted and signed into data sharing agreements. A data-sharing agreement (DSA) refers to a "contract, joint issuance, or similar document containing the terms and conditions of a data-sharing arrangement between two or more parties." Because the process of drafting and signing can take significant time, this step can coincide with the establishment of technical protocols for creating the central data warehouse in Step N3.

As the lead agency and independent body with the mandate to administer and implement the DPA, the NPC has expressed support for digitization efforts in DDR-CCA and can provide further assistance in pursuing data-sharing agreements for this endeavor.

Some Prerequisites to Drafting Data Sharing Agreements

Refer to the NPC Privacy Toolkit. The NPC has developed and disseminated the Third Edition of the NPC Privacy Toolkit in May 2018, which serves as a detailed guide for stakeholders to identify the steps needed to ensure data privacy. This should serve as the main reference for the preparation and development of the data-sharing agreements and steps after the signing of the DSAs.

Appoint Data Protection Officers. For each government agency, a data privacy officer (DPO) should be appointed, where they are expected to have expertise in "relevant privacy or data protection policies

and practices" and "processing operations being carried out by the Personal Information Controller (PIC) or Personal Information Processor (PIP), including the latter's information systems, data security and/or data protection needs." Among the duties and responsibilities of a DPO listed in the NPC Privacy Toolkit, highlights include but are not limited to the following:

- monitor the PIC's or PIP's compliance with the DPA, its IRR, issuances by the NPC and other applicable laws and policies;
- advice the PIC or PIP regarding complaints and/or the exercise by data subjects of their rights (e.g., requests for information, clarifications, rectification or deletion of personal data);
- ensure proper data breach and security incident management by the PIC or PIP, including the latter's preparation and submission to the NPC of reports and other documentation
- concerning security incidents or data breaches within the prescribed period;
- inform and cultivate awareness on privacy and data protection within the organization of the PIC or PIP, including all relevant laws, rules and regulations and issuances of the NPC;
- advocate for the development, review and/or revision of policies, guidelines, projects and/or programs of the PIC or PIP relating to privacy and data protection, by adopting a privacy by design approach;
- serve as the contact person of the PIC or PIP vis-à-vis data subjects, the NPC and other authorities in all matters concerning data privacy or security issues or concerns and the PIC or PIP; and,
- cooperate, coordinate and seek advice from the NPC regarding matters concerning data privacy and security.

Conduct a Privacy Impact Assessment. Another critical prerequisite to the drafting of data-sharing agreements, which should begin at the early stages of the initiative, is the conduct of a Privacy Impact Assessment (PIA). This pertains to the process of "assessing the potential impacts on the privacy of a process, information system, program, software module, device or other initiatives which processes personal information and in consultation with stakeholders, for taking actions as necessary to treat privacy risk." The results of this PIA report will inform the succeeding data-sharing agreements. The conduct of a PIA requires the assignment of a designated PIC to conduct a PIA with possible support

from an assisting PIP.

Draft Memorandum of Agreements. Separate from the DSA, government entities involved are expected to enter into Memorandum of Agreements, or contracts, where their respective roles are clearly defined concerning the data sharing processes. The government agencies should define these parameters, depending on the agreed upon structure and processes to be implemented and adopted.

Draft of Privacy Management Program and Privacy Manual. Aside from conducting a PIA, the NPC Toolkit also highlights the need for a Privacy Management Program (PMP) to assist PICs and PIPs in ensuring compliance with the DPA and that no data privacy violations are committed. Essentially, a PMP ensures that everyone on board is aligned on purpose, expected results, benefits, and roadmap towards achieving the undertaking. Key components to a PMP include Governance, Program Controls, Continuity and Establishment of a Privacy Ecosystem and Oversight Plan, and Assessment and Review of Program Controls.

Secondly, each PIP or PIC is expected to produce a Privacy Manual, detailed in the NPC Toolkit. This is a guidebook for compliance with the DPA, its IRR, and other relevant issuances of the NPC, as well as privacy and data protection protocols for specific circumstances (e.g., from collection to destruction).

Requirements in a Data Sharing Agreement

Once the prerequisites cited above and other more detailed information specified in the NPC Toolkit have been discussed by the entities involved, the respective DSAs can be drafted. The NPC template for which is attached in **Appendix A**.

Structurally, the NPC template contains the following information:

- Purpose
- Identity of all PICs party to the agreement
- Term or duration of the agreement

- Operational details of the sharing or transfer of personal data
- General description of the security measures for the protection of personal data, including the policy for retention or disposal of records
- Inform how a data subject can obtain a copy of the data-sharing agreement
- Details on online access
- Specify the PIC responsible for addressing any information request, or any complaint filed by a data subject, and/or any investigation by the Commission
- Identify the method that shall be adopted for the secure return, destruction, or disposal of the shared data
- Other terms and conditions

These are the parameters in which the government entities involved in the collection, production, sharing, and processing of DRR-CCA data should be identified. In other words, it is critical that the use and purpose of the data are clear and that whom the data is shared with is identified.

Data Sharing Agreements for the Centralized Data Warehouse

Based on the proposed high-level structure in Chapter 3, the many entities involved in the data sharing processes can create separate DSAs to cover specific segments of the said processes.

Generally, there are connections in the proposed structure between NGAs (as data providers) and the Central Data Warehouse (as a recipient). There are also connections between LGUs (as data providers), represented by the DILG, and the Central Data Warehouse. Aside from these, there may be connections between the Central Data Warehouse and other data sources (e.g., CSOs, private sector) that require DSAs, especially if the data contains personal/sensitive information. After the data is stored in the warehouse, these same data providers become subsequent recipients or data users of the datasets stored in the Data Warehouse as the central repository.

The NGAs can opt to have one DSA for each distinct entity connected to the DRRM System Administrators,

as long as the agreements define the roles and parameters required by the NPC template, as mentioned above. The same applies for LGUs, which the DILG may represent. Additionally, the DSAs can be amended if additional use, purpose requirements, or types of data are added or changed later on.

Post-Data Sharing Agreement Requirements

After the DSAs are drafted and signed by the parties involved, there continues to be a need to ensure compliance with the requirements of the DPA. These include the conduct of regular Privacy Impact Assessments, the implementation of Data Privacy Policies and related activities based on the Privacy Management Manual, and the registration of the Data Processing Systems, if applicable. These are discussed in detail as well in the NPC Toolkit.

The expected outputs of Step N2 are as follows:

- Signed Data Sharing Agreements
- List of DOST-approved User Requirements for Step N3

Step N3: Establish the requirements, protocols, and architecture needed to scale GeoRiskPH's capacity.

The next step requires the different NGAs who partake in the DRRM-CCA space to discuss and determine the ideal arrangements of multi-agency concerns involving team composition, stakeholder management, data access policies, and technical requirements. The scores shown on the DDRRMM dashboard can help guide the technical requirements discussions in this step. Furthermore, this can coincide with the drafting of DSAs in Step N2. The human resource capacities of different DOST agencies should also be assessed to fill potential deficiencies in executing the activities in this strategy.

Overall, the output of these discussions shall be an interagency data governance framework that promotes the accessibility of data and multidisciplinary collaboration. The DRRM system shall be the application and product of this framework.

The discussion should at least include the following matters:

- Team composition and succession plans of the DRRM System Administrators;
- Roles and responsibilities of non-governmental institutions who wish to contribute to the data warehouse;
- Identifications of priority data users and data generators, and their dataset requirements;
- Data warehouse schema, data sources, ingestion tools, and ingestion schedules;
- Data warehouse architecture and table partitioning;
- Data access policies and permissions involving data users, data generators, platform holder, and process holder; and,
- Stakeholder management.

The expected outputs of this step of the project are as follows:

- Final DRRM system architecture to be be adopted by GeoRiskPH
- NGA action plans with approved funding allocation from the Department of Budget and Management
- Interagency Data Governance Framework approved and validated by members of the NDRRMC
- An initial team of DRRM System Administrators composed of people from at least DENR-NAMRIA, DENR-MGB, DOST-PAGASA, and DOST-PHIVOLCS

Step N4.1: Build additional data warehouse features and plan for the facilitation of data interface connections.

After settling on the technical requirements, changes to the governance responsibilities, changes to the data management practices, and the development of GeoRiskPH's additional features and needed connectors can be worked on. A priority list of data sources to connect to should also be determined to ensure seamless data migration during the latter part of the project. The exact details of the resulting outputs shall depend on the previous step.

Nonetheless, the expected outputs of this step of the project are as follows:

- List of data interfaces with prioritization approved by DOST and validated by members of the TWG
- Final list of user requirements validated by DRRM System Administrators that the developers on the project will work on to connect the data interfaces to the data warehouse

Step N4.2: Create an implementation plan and allocate resources for capacity building activities.

While the data warehouse itself is being prepared, the less technical aspects of the project should be developed. Once the data warehouse itself is established, users who are part of the DRRM System Administrators should be onboarded on how to use specific components of the platform and how to maximize its features. Similarly, external data users like those from NGAs, LGUs, and the private sector will need learning materials as documentation to educate themselves on utilizing the available data interfaces.

The Pandas library's documentation and the National Oceanic and Atmospheric Administration (NOAA) Climate Data Online documentation are some examples of good documentation.

The expected outputs of this step of the project are as follows:

- Human resource capacity building plan
- Documentation and learning materials of DRRM System Administrators and other platform holders
- Resource allocation and budget approved by government representatives and funding agencies

Step N5: Connect priority data interfaces and execute the capacity-building campaigns.

The data warehouse infrastructure has been set up, and the needed capacity-building materials are complete. Data migration from the previously identified data sources, which NGAs own, can proceed. Enablement activities can be launched according to the current competencies of the NGAs' staff, along with the data migration. Otherwise, the documentation created in the previous step would suffice. This step also includes the signing of the DSAs, a prerequisite to connecting data interfaces to the data warehouse.

The expected outputs of this step of the project are as follows:

- Data interfaces connected to the data warehouse with signed documentation to be kept by both the DRRM System administrators and the data interface owners
- Manpower of specific roles and responsibilities with the needed skills to sustain the data interface connections

Step N6: Support the LGUs' capacity building activities.

Under the assumption that the NGA workstream will be completed faster than the LGU workstream, the people who are now available can support the capacity-building activities in the LGU workstream. This will increase the speed project given its broad scope. This workstream is discussed in the next section. In the long term, perpetually ongoing support shall be given to the LGUs by the DRRM System Administrators.

The expected outputs of this step of the project are as follows:

- A formal and standard avenue of communication between DRRM System Administrators and LGUs finalized by the DRRM System Administrators

2.3.2. The Local Government Unit Workstream

Step L2: Establish exposure database guidelines based on the standardized DRRM-CCA methodology.

After establishing standard methodologies and guidelines on how DRRM-CCA plans are created, exposure database guidelines can then be created. This sequence is essential because the schema of the exposure database relies on the needed data fields that are established in Step N1. The exact output of Step N1 will also dictate the minimum required frequency of data updates and the resources necessary to comply with reporting needs. Overall, the expected outputs of this step are the following:

- The bare minimum database schema and data fields necessary to create local DRRM-CCA plans in accordance to the metrics and formulas defined in step N1;
- the guidelines on data management practices; and,
- the benchmark of the minimum resources requirements to develop and maintain exposure databases.

- Exposure database guidelines containing at least the ff:
  - Minimum schema necessary to create local DRRM-CCA plans
  - Guidelines on data management practices
  - Benchmark of the minimum resources requirements to develop and maintain exposure databases

Step L3: Determine the baseline LGU resource capacities needed to follow the established guidelines.

LGU's resource capacities and baseline resource requirements should then be assessed to determine the most cost-effective implementation strategy. These resources refer to equipment, infrastructure, and human resource requirements needed by LGUs to participate and maintain the DRRM system. Considering that the minimum requirements have been identified in Step L2 and that insufficient resources have been determined, the approximate cost of the entire project could be estimated, and an operationalization plan can be constructed.

The expected outputs of this step of the project are as follows:

- Operationalization plan for implementation approved and validated by DOST and their development partners

Step L4: Create shared learning documents for LGUs.

From the results of the DGS, it was evident that resources in the form of human resource competencies were lacking on the LGU's side. This implies that knowledge transfer methodologies and materials were insufficient to aid the LGUs contacted. Hence, learning materials similar to what was described in Step N4.2 shall be created for the specific use of LGUs. These materials shall go hand-in-hand with the capacity-building activities at the later stages of this workstream.

The expected outputs of this step of the project are as follows:

- A defined set of published learning materials for LGUs that can be accessed both online and offline

Step L5: Select a group of LGUs that will proceed with the project's activities.

The simultaneous participation of LGUs in the project can outpace the ability of the project team to capacitate the participants properly, so only a select number of units should be selected based on the implementation strategy considerations.

This step and those following it shall be repeated until the minimum requirements have been rolled out to all LGUs in the country.

The expected outputs of this step of the project are as follows:

- A defined list of LGUs and their contact details to engage with in order of prioritization
- Signed Memorandum of Understanding between implementing body and each LGU

Step L6: Provide the needed resources to a group of the LGUs.

The needs of each LGU shall vary and will be subject to constraints unique to the locality. As a result, the execution of resource provision shall change. A certain degree of adaptability is needed to achieve the objective of this step successfully.

The expected outputs of this step of the project are as follows:

- All LGUs of current selection are equipped with at least the baseline required resources

Step L7: Launch a one-time capacity building activity for the group of LGUs.

This entire project and guideline might be new to many of the LGUs. The assumption that the local staff know to operate with the guidelines alone could lead to an unsuccessful rollout of the system. To avoid this, a one-time capacity-building campaign shall be launched for each group of LGUs who participate in this project.

The expected outputs of this step of the project are as follows:

- At least a 90% attendance rate for each cluster of LGUs being trained

Step L8: Facilitate help desk access.

The DRRM-CCA space is dynamic. Changes will inevitably be required as each locality adapts to the challenges at hand. At such a junction, the system in place, under the management of the DRRM System Administrators, should adapt to the changes. The prerequisite to such adaptation are communication and feedback with the end-user. In this instance, the end-users are the LGUs. Such is the reason why a 'help desk' or a communications channel of similar nature between the LGUs and the DRRM System Administrators should be available. The avenue connecting the two entities will ensure that changes needed by the users are communicated directly to the providers of the data.

The expected outputs of this step of the project are as follows:

- All relevant members of the LGUs' DRRM team has been registered or added into the DRRM System Administrators' preferred communication channel
- The communication line between each LGU should pass a series of basic connection tests

APPENDIX A: NPC Data Sharing Agreement Template

DATA SHARING AGREEMENT

(Note: Please consider the results of your Privacy Impact Assessment.)

This Data Sharing Agreement, entered into this ____ day of _____ 2018 in _____ by and between

[PERSONAL INFORMATION CONTROLLER A]

and

[PERSONAL INFORMATION CONTROLLER B]

[PERSONAL INFORMATION CONTROLLER A] and [PERSONAL INFORMATION CONTROLLER B], hereinafter collectively referred to as "Parties", have reached the following agreement:

Section 1. Purpose of Data Sharing

1.1. The Parties are entering into this Agreement, and [PERSONAL INFORMATION CONTROLLER A] is granting [PERSONAL INFORMATION CONTROLLER B] access to the personal data described under Section 2 hereof for the following purposes:

a. [MAIN PURPOSE]

b. [PUBLIC FUNCTION, PUBLIC SERVICE OR BUSINESS ACTIVITY THE PERFORMANCE OF WHICH THE AGREEMENT IS MEANT TO FACILITATE]

c. [IF THE PURPOSE INCLUDES THE GRANT OF ONLINE ACCESS TO PERSONAL DATA, OR IF ACCESS IS OPEN TO THE PUBLIC OR PRIVATE ENTITIES, THESE SHALL ALSO BE CLEARLY SPECIFIED HEREIN.]

1.2. 1.2. [PERSONAL INFORMATION CONTROLLER B], on the other hand, is granting [PERSONAL INFORMATION CONTROLLER A] access to the personal data described under Section 2 hereof for the following purposes.

a. [MAIN PURPOSE]

b. [PUBLIC FUNCTION, PUBLIC SERVICE OR BUSINESS ACTIVITY THE PERFORMANCE OF WHICH THE AGREEMENT IS MEANT TO FACILITATE

c. [IF THE PURPOSE INCLUDES THE GRANT OF ONLINE ACCESS TO PERSONAL DATA, OR IF ACCESS IS OPEN TO THE PUBLIC OR PRIVATE ENTITIES, THESE SHALL ALSO BE CLEARLY SPECIFIED HEREIN.]

Section 2. Personal Data to be Shared

[TYPE OF PERSONAL DATA TO BE SHARED UNDER THE AGREEMENT FOR EVERY PARTY]

[CATEGORIES OF PERSONAL DATA WHETHER PERSONAL INFORMATION OR SENSITIVE PERSONAL INFORMATION]

Section 3. Consent of the Data Subject

Parties charged with the collection of personal data directly from the data subjects assure and undertake to obtain the consent of the data subject prior to collection and processing, except where such consent is not required for the lawful processing of personal data, as provided by law.

a. The identity of personal information controllers or personal information processors that will be given access to the personal data;

b. The purpose of data sharing;

c. The categories of personal data concerned;

d. Intended recipients or categories of recipients of the personal data;

e. Existence of the rights of data subjects, including the right to access and correction, and the right to object. However, the other party shall be informed of any request to access or correct personal information which is the subject matter of this sharing agreement; and

f. Other information that would sufficiently notify the data subject of the nature and extent of data sharing and the manner of processing.

Section 4. Procedures for Use or Process of Personal Data

Parties assure and undertake to inform the data subjects of the following information prior to collection or before personal data is shared:

a. The identity of personal information controllers or personal information processors that will be given access to the personal data;

b. The purpose of data sharing;

c. The categories of personal data concerned;

d. Intended recipients or categories of recipients of the personal data;

e. Existence of the rights of data subjects, including the right to access and correction, and the right to object. However, the other party shall be informed of any request to access or correct personal information which is the subject matter of this sharing agreement; and

f. Other information that would sufficiently notify the data subject of the nature and extent of data sharing and the manner of processing.

4.1. Manner of Sharing and Processing. [HOW PARTIES MAY USE OR PROCESS THE PERSONAL DATA, INCLUDING, BUT NOT LIMITED TO, ONLINE ACCESS]. Provided that processing and sharing must adhere to the data privacy principles laid down in Republic Act No. 10173, its Implementing Rules and Regulations, and other issuances of the National Privacy Commission.

4.2. Standard of Care. A party to this Agreement who receives personal data from the other party shall exercise at least the same degree of care as it uses with its own personal data and confidential information, but in no event less than reasonable care, to protect the personal data from misuse and unauthorized access or disclosure.

4.3. Safeguards Around Personal Data. A party to this Agreement who receives personal data from the other party shall use appropriate safeguards to protect the personal data from misuse and unauthorized access or disclosure, including maintaining adequate physical controls and password protections for any server or system on which the personal data is stored, ensuring that personal data is not stored on any mobile device (for example, a laptop or smartphone) or transmitted electronically unless encrypted (using encryption standard prescribed by the National Privacy Commission), and taking any other measures reasonably necessary to prevent any use or disclosure of the personal data other than as allowed under this Agreement.

4.4. Permitted Disclosure. Parties may disclose the personal data only to:
a. The extent necessary;
b. To authorized persons only;
c. With notice to the other party; and
d. With the consent of the data subject or when expressly authorized by law.

4.5. Required Disclosure. If a party is compelled by law to disclose any personal data, it shall notify the other party of such fact before disclosing the compelled personal data.

4.6. Breach Management
a. Report. Within twenty-four (24) hours of becoming aware of any unauthorized use or disclosure of the personal data or any security incident or possible security breach, a party shall promptly report such fact to the other party who shared the personal data. Both Parties shall, within seventy-two (72) hours from such occurrence, notify the National Privacy Commission and the concerned data subjects in accordance with NPC Circular 16-03.

b. Cooperation and Mitigation. A party who receives the personal data shall cooperate with any mediation that the other party, in its discretion, determines is necessary to:

i. address any applicable reporting requirements, and
ii. mitigate any effects of such unauthorized use or disclosure of the personal data or any security incident or possible security breach, including measures necessary to restore goodwill with stakeholders, including research subjects, collaborators, governmental authorities, and the public.

4.7. No Modification of Personal Data. A party shall not copy, decompile, modify, reverse engineer, or create derivative works out of any of the personal data receives from or shared by the other party.

Section 5. Operational Details of the Sharing or Transfer of Personal Data

[OVERVIEW OF THE OPERATIONAL DETAILS OF THE SHARING OR TRANSFER OF PERSONAL DATA AND MUST EXPLAIN TO A DATA SUBJECT THE NEED FOR THE AGREEMENT, AND THE PROCEDURE THAT THE PARTIES INTEND TO OBSERVE IN IMPLEMENTING THE SAME]

Section 6. Security Measures

[GENERAL DESCRIPTION OF THE SECURITY MEASURES TO MAINTAIN THE CONFIDENTIALITY, INTEGRITY AND AVAILABILITY OF PERSONAL DATA AND TO ENSURE THE PROTECTION OF THE PERSONAL DATA OF DATA SUBJECTS, INCLUDING THE POLICY FOR RETENTION OR DISPOSAL OF RECORDS]
[ADEQUATE SAFEGUARDS FOR DATA PRIVACY AND SECURITY MUST BE DETAILED AND REITERATE THE DUTY TO UPHOLD THE RIGHTS OF THE DATA SUBJECTS]

What must be done to safeguard:

Confidentiality: make sure that data are only available to the persons who are to have access to them.

Integrity: prevent unauthorized or inadvertent change to personal data.

Availability: ensuring access to personal data where accessibility is necessary.

[WHERE A DATA SHARING AGREEMENT INVOLVES THE ACTUAL TRANSFER OF PERSONAL DATA OR A COPY THEREOF FROM ONE PARTY TO ANOTHER, SUCH TRANSFER SHALL COMPLY WITH THE SECURITY REQUIREMENTS IMPOSED BY THE ACT, ITS IRR, AND ALL APPLICABLE ISSUANCES OF THE NATIONAL PRIVACY COMMISSION.]

(Note: Please refer to NPC Circular 16-01: Security of Personal Data in Government Agencies.)

Section 7. Online Access to Personal Data

[IF A PARTY SHALL GRANT ONLINE ACCESS (AS REFERRED IN SECTION 4.1) TO PERSONAL DATA UNDER ITS CONTROL OR CUSTODY TO THE OTHER, IT SHALL SPECIFY THE FOLLOWING INFORMATION:

a. JUSTIFICATION FOR ALLOWING ONLINE ACCESS;

b. PARTIES THAT SHALL BE GRANTED ONLINE ACCESS;

c. TYPES OF PERSONAL DATA THAT SHALL BE MADE ACCESSIBLE ONLINE;

d. ESTIMATED FREQUENCY AND VOLUME OF THE PROPOSED ACCESS; AND

e. PROGRAM, MIDDLEWARE AND ENCRYPTION METHOD/ STANDARD THAT WILL BE USED.]

[WHERE A GOVERNMENT AGENCY GRANTS ONLINE ACCESS TO PERSONAL DATA UNDER ITS CONTROL OR CUSTODY, SUCH ACCESS MUST BE DONE VIA A SECURE ENCRYPTED LINK. THE GOVERNMENT AGENCY CONCERNED MUST DEPLOY MIDDLEWARE THAT SHALL HAVE FULL CONTROL OVER SUCH ONLINE ACCESS.]

Section 8. Mutual Representations

a. **No Restriction.** Neither party is under any restriction or obligation that could affect its performance of its obligations under this Agreement.

b. **No Violation, Breach, or Conflict.** Neither party's execution, delivery, and performance of this Agreement and the other documents to which it is a party, and the consummation of the transactions contemplated in this Agreement, do or will result in its violation or breach of the Data Privacy Act of 2012, its IRR and other issuances of the National Privacy Commission, and other related and applicable laws, or conflict with, result in a violation or breach of, constitute a default under, or result in the acceleration of any material contract.

c. **Ownership.** The party sharing personal data has the [exclusive] right to grant the other party use of the personal data.

Section 9. Return, Destruction, or Disposal of Transferred Personal Data

[UNLESS OTHERWISE PROVIDED BY THE DATA SHARING AGREEMENT, ALL PERSONAL DATA TRANSFERRED TO OTHER PARTIES BY VIRTUE OF SUCH AGREEMENT SHALL BE RETURNED, DESTROYED, OR DISPOSED OF, UPON THE TERMINATION OF THE AGREEMENT.]
[IT SHALL IDENTIFY THE METHOD THAT SHALL BE ADOPTED FOR THE SECURE RETURN, DESTRUCTION OR DISPOSAL OF THE SHARED DATA AND THE TIMELINE THEREFOR.]

On the expiration or termination of the Agreement, or on a party's request, the other party shall promptly:

a. return the personal data and any other property, information, and documents, including confidential information, provided by it;

b. delete all the personal data including confidential information provided by it,

relating to the data processing and sharing;

c. destroy all copies it made of personal data and any other property, information, and documents, including confidential information; and

d. if requested, deliver to the requesting party an affidavit or certification confirming the other party's compliance with the return or destruction obligation under this section.

Upon termination or expiration of this Agreement, the party who receives the personal data shall cease all further use of any personal data, whether in tangible or intangible form.

Section 10. Use of Name

Neither party will use the other party's name, logos, trademarks, or other marks without that party's written consent.

Section 11. Term

[IT SHALL SPECIFY THE TERM OR DURATION OF THE AGREEMENT, WHICH MAY BE RENEWED ON THE GROUND THAT THE PURPOSE/S OF SUCH AGREEMENT CONTINUES TO EXIST: PROVIDED, THAT IN NO CASE SHALL SUCH TERM OR ANY SUBSEQUENT EXTENSIONS THEREOF EXCEED FIVE (5) YEARS, WITHOUT PREJUDICE TO ENTERING INTO A NEW DATA SHARING AGREEMENT.]

11.1. **Effectivity.** This Agreement is effective upon the date last signed and executed by the duly authorized representatives of the Parties to this Agreement and shall remain in full force and effect until modified or terminated by mutual agreement, in writing, by both Parties.

11.2. **Termination on Notice.** Either party may terminate this agreement on any valuable cause on through a written notice delivered to the other party [TERMINATION NOTICE DAYS] days prior to the termination date.

11.3. **Termination for Material Breach.** So long as the rights and welfare of the data subjects will not be prejudiced, each party may terminate this agreement with immediate effect by delivering notice of the termination to the other party, if:

a. the other party fails to perform, has made or makes any inaccuracy in, or otherwise materially breaches, any of its obligations, covenants, or representations, and

b. the failure, inaccuracy, or breach continues for a period of [BREACH CONTINUATION DAYS] days after the injured party delivers notice to the breaching party reasonably detailing the breach.

11.4. This Agreement may likewise be extended, by mutual consent, through a written notice by either party of its intention to extend this Agreement thirty (30) days before the termination period set.

Section 12. Remedies of the Data Subject

[REMEDIES AVAILABLE TO A DATA SUBJECT, IN CASE THE PROCESSING OF PERSONAL DATA VIOLATES HIS OR HER RIGHTS, AND HOW THESE MAY BE EXERCISED]

Section 13. Indemnification

The defaulting party shall indemnify the aggrieved party against all losses and expenses arising out of any proceeding:

a. Brought by either a third party or by the aggrieved party;

b. arising out of the party's breach of its obligations, representations, warranties, or covenants under this agreement; and

c. Arising out of the defaulting party's willful misconduct or gross negligence.

Section 14. Authorized Personal Information Processor

[ANY PERSONAL INFORMATION PROCESSOR, NOT PARTY TO THIS AGREEMENT, THAT WILL HAVE ACCESS TO OR PROCESS THE SAME PERSONAL DATA SHARED TO AND BY ANY OF THE PARTIES INCLUDING THE TYPES OF PROCESSING IT SHALL BE ALLOWED TO PERFORM]

Section 15. Data Protection Officer or Compliance Officer

[DESIGNATED DATA PROTECTION OFFICERS AND COMPLIANCE OFFICERS FOR PRIVACY OF THE PARTIES, THEIR POSITIONS IN THE COMPANY/ AGENCY AND THEIR CONTACT DETAILS]

Section 16. Personal Information Controller Responsible for Information Request, or Any Complaint

[PERSONAL INFORMATION CONTROLLER RESPONSIBLE FOR ADDRESSING ANY INFORMATION REQUEST, OR ANY COMPLAINT FILED BY A DATA SUBJECT AND/ OR ANY INVESTIGATION BY THE NATIONAL PRIVACY COMMISSION]

Section 17. General Provisions

17.1. **Security of Personal Data.** Data sharing shall only be allowed where there are adequate safeguards for data privacy and security. Parties shall use contractual or other reasonable means to ensure that personal data is covered by a consistent level of protection when it is shared or transferred.

17.2. **Access of the Data Sharing Agreement.** [STATE HOW A COPY OF THE AGREEMENT MAY BE ACCESSED BY A DATA SUBJECT]

[GOVERNMENT AGENCY MAY REDACT OR PREVENT THE DISCLOSURE OF ANY DETAIL OR INFORMATION THAT COULD ENDANGER ITS COMPUTER NETWORK OR SYSTEM, OR EXPOSE TO HARM THE INTEGRITY, AVAILABILITY OR CONFIDENTIALITY OF PERSONAL DATA UNDER ITS CONTROL OR CUSTODY. SUCH INFORMATION MAY INCLUDE THE PROGRAM, MIDDLEWARE AND ENCRYPTION METHOD IN USE AS PROVIDED IN SECTION 7.]

17.3. **Responsibility of the Parties.** Parties shall comply with the Act, its IRR, and all applicable issuances of the National Privacy Commission, including putting in place adequate safeguards for data privacy and security.

17.4. **Confidentiality Obligations.** The party who receives shall hold the other party's personal data in strict confidence. Each party will use the same degree of care to protect the data as it uses to protect its own data of like nature, but in no circumstances less than reasonable care. The party who receives shall ensure that its employees or agents are bound to the same obligations of confidentiality as the other party. The obligation of confidentiality shall be maintained even after the termination of this Agreement but shall not apply with respect to information that is independently developed by the Parties, lawfully becomes a part of the public domain, or of which the Parties gained knowledge or possession free of any confidentiality obligation.

17.5. **Accountability for Cross-border Transfer of Personal Data.** Each party shall be responsible for any personal data under its control or custody, including those it has outsourced or subcontracted to a personal information processor. This extends to personal data it shares with or transfers to a third party located outside the Philippines, subject to cross-border arrangement and cooperation.

17.6. **Assignment.** Neither party may assign this Agreement or any of their rights or obligations under this Agreement without the other party's written consent and notice to the data subjects.

17.7. **Governing Law.** This Agreement shall be governed, construed, and enforced in accordance with the laws of the Republic of the Philippines.

17.8. **Mandatory Periodic Review.** The terms and conditions of this Agreement shall be subject to a mandatory review by the Parties thereto upon the expiration of its term, and any subsequent extensions thereof. The Parties shall document and include in its records:

A. reason for terminating the agreement or, in the alternative, for renewing its term; and

B. in case of renewal, any changes made to the terms and conditions of the agreement.

17.9 **Review and Modification.** Parties hereby authorizes the National Privacy Commission to review the contents of this Agreement and, whenever it becomes necessary, suggest any amendment or revision hereof.

In such a case, **Parties** shall execute an amended Agreement within fifteen (15) days from Notice of Review by the National Privacy Commission containing its observations and suggestions in order to be compliant with the provisions of the

Data Privacy Act, its Implementing Rules and Regulations and other issuances of the National Privacy Commission.

17.10 **Severability.** If any part of this Agreement is declared unenforceable or invalid, the remainder will continue to be valid and enforceable.

17.11 **Alternative Dispute Resolution.** In the event of any dispute or difference of any kind whatsoever arising out of or relating to this Agreement, the Parties shall, at first instance, exercise their best efforts to resolve the dispute or difference by mutual consultation as soon as possible. In case best efforts fail, the dispute or difference shall be referred to alternative dispute resolution which shall be governed in accordance with the provisions provided in Republic Act No. 9285, otherwise known as the "Alternative Dispute Resolution Law." The seat of the arbitration shall be the Philippines.

17.12 **Venue of Actions.** In case of a court suit, the venue shall be the courts of competent jurisdiction in [CITY OR MUNICIPALITY WHERE THE ACTIONS WILL BE FILED] to the exclusion of all other courts subject to prior resort to alternative dispute resolution as herein prescribed.

IN WITNESS WHEREOF, the Parties hereto have affixed their respective signatures this _____ day of _____ 2018 in _____, Philippines.

_____	_____
Name Position Name of Organization/Institution	**Name** Position Name of Organization/Institution

WITNESS

ACKNOWLEDGMENT

REPUBLIC OF THE PHILIPPINES)
_____) S S

_____	_____
Name Position Name of Organization/Institution	**Name** Position Name of Organization/Institution

Before me this ____ day of _____ 2018 in _____ personally appeared:

Names	Government Issued Identification Document			
	ID No.	Date	Place Issued	Expiry Date

all known to me and to me known to be the same persons who executed the foregoing instrument consisting of _____ pages including this page, and they acknowledged to me that the same is their own free and voluntary act and deed and the entities they represent.

IN WITNESS WHEREOF, I have hereunto set my hand this _____ day of _____, 2018.

Doc No. _____;
Page No. _____;
Book No. _____;
Series of 2018.

References

Housing and Land Use Regulatory Board. (2015). Supplemental Guidelines on Mainstreaming Climate Change and Disaster Risks in the Comprehensive Land Use Plan.

Retrieved from https://dhsud.gov.ph/wp-content/uploads/Publication/Guidebooks/HLURB_Supplemental_Guidelines.pdf

Republic Act 10173 – Data Privacy Act of 2012 (2012).

National Disaster Risk Reduction and Management Council, Office of Civil Defense, the World Bank. (2021). Ready to Rebuild: Disaster Rehabilitation and Recovery Planning Guide Workbook.

Retrieved from https://ndrrmc.gov.ph/attachments/article/4145/FOR_UPLOADING_Ready_to_Rebuild_Workbook_Feb24.pdf

National Privacy Commission. (2018). NPC Privacy Toolkit.

Retrieved from https://www.privacy.gov.ph/wp-content/files/attachments/nwsltr/3rdToolkit_0618.pdf

Office of Civil Defense Policy Development and Planning Service. (2020). National Disaster Risk Reduction and Management Plan 2020-2030. Quezon City.

Retrieved from https://ndrrmc.gov.ph/attachments/article/4147/NDRRMP-Pre-Publication-Copy-v2.pdf

United Nations Development Programme (UNDP) Bangkok Regional Hub. Digital Disaster Risk Reduction Maturity Model (DDRRMM).

Retrieved from https://drive.google.com/file/d/1hmmFQetvcy1F1tm3mKxu2yRWOTuKiCn/view?usp=sharing

United Nations Development Programme (UNDP) Philippines. Mapping and Analysis of Vulnerable Groups for Climate Change Adaptation and Disaster Risk Reduction (CCA-DRR) in Support of the Digital Readiness Strategy in the Philippines.

Retrieved from https://www.asia-pacific.undp.org/content/rbap/en/home/blog/2021/blog-mavg-philippines.html

UNDP partners with people at all levels of society to help build nations that can withstand crises, and drive and sustain the kind of growth that improves the quality of life for everyone. On the ground in more than 170 countries and territories, we offer global perspective and local insight to help empower lives and build resilient nations.

United Nations Development Programme
Philippines Country Office
15th Floor North Tower, Rockwell
Business Center Sheridan
Sheridan Street corner United Street
Highway Hills, 1554 Mandaluyong City, Philippines
Email: registry.ph@undp.org
Website: https://www.ph.undp.org/